© – TE Connectivity. All Rights Reserved.

REVISIONS					
P	LTR	DESCRIPTION	DATE	DWN	APVD
	L1	REVISED PER ECN-22-164707	15JUL2022	RK	MF

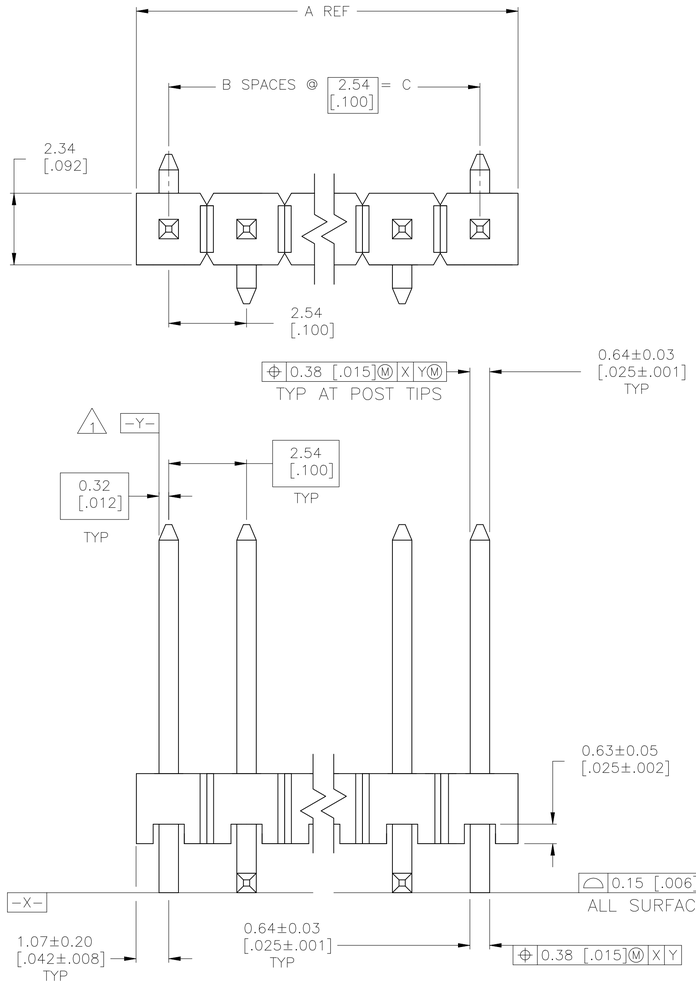

1. THE NOTED DIMENSIONS APPLY AT THE INTERSECTION OF THE POST AND THE HOUSING.
2. 0.000762[.000030] GOLD ON CONTACT AREA, 0.00254[.000100]–0.00508[.000200] MATTE TIN–LEAD ON SOLDER TAIL, ALL OVER 0.00127[.000050] NICKEL.
3. HOUSING: LCP, COLOR–BLACK. POSTS: COPPER ALLOY.
4. 0.000762[.000030] GOLD ON CONTACT AREA, 0.00254[.000100]–0.00508[.000200] MATTE TIN ON SOLDER TAIL, ALL OVER 0.00127[.000050] NICKEL.
5. OBSOLETE PARTS: OBSOLETE CIS STREAMLINING PER D.RENAUD/D.SINISI

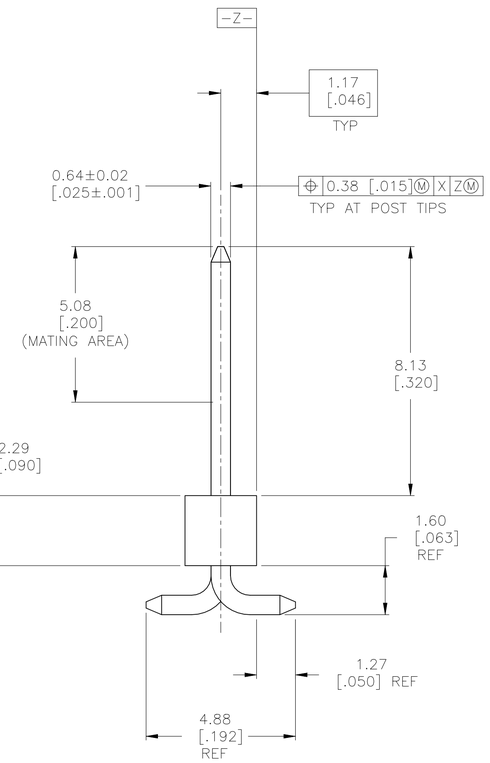

	4	35.56 [1.400]	14	35.69 [1.484]	15	6-146129-3
	4	33.02 [1.300]	13	33.15 [1.384]	14	6-146129-2
	4	30.48 [1.200]	12	30.61 [1.284]	13	6-146129-1
	4	27.94 [1.100]	11	28.07 [1.184]	12	6-146129-0
	4	25.40 [1.000]	10	27.53 [1.084]	11	5-146129-9
	4	22.86 [.900]	9	24.99 [.984]	10	5-146129-8
	4	20.32 [.800]	8	22.45 [.884]	9	5-146129-7
	4	17.78 [.700]	7	19.91 [.784]	8	5-146129-6
	4	15.24 [.600]	6	17.37 [.684]	7	5-146129-5
	4	12.70 [.500]	5	14.83 [.584]	6	5-146129-4
	4	10.16 [.400]	4	12.29 [.484]	5	5-146129-3
	4	7.62 [.300]	3	9.75 [.384]	4	5-146129-2
	4	5.08 [.200]	2	7.21 [.284]	3	5-146129-1
5 OBSOLETE	2	35.56 [1.400]	14	35.69 [1.484]	15	~~1-146129-3~~
OBSOLETE	2	33.02 [1.300]	13	33.15 [1.384]	14	1-146129-2
5 SUPERSEDED	2	30.48 [1.200]	12	30.61 [1.284]	13	~~1-146129-1~~
OBSOLETE	2	27.94 [1.100]	11	28.07 [1.184]	12	~~1-146129-0~~
OBSOLETE	2	25.40 [1.000]	10	27.53 [1.084]	11	~~146129-9~~
5 OBSOLETE	2	22.86 [.900]	9	24.99 [.984]	10	~~146129-8~~
5 OBSOLETE	2	20.32 [.800]	8	22.45 [.884]	9	~~146129-7~~
5 SUPERSEDED	2	17.78 [.700]	7	19.91 [.784]	8	~~146129-6~~
OBSOLETE	2	15.24 [.600]	6	17.37 [.684]	7	146129-5
5 OBSOLETE	2	12.70 [.500]	5	14.83 [.584]	6	~~146129-4~~
5 SUPERSEDED	2	10.16 [.400]	4	12.29 [.484]	5	~~146129-3~~
OBSOLETE	2	7.62 [.300]	3	9.75 [.384]	4	~~146129-2~~
OBSOLETE	2	5.08 [.200]	2	7.21 [.284]	3	~~146129-1~~
	PLATING	C	B	A	NO OF POSN	PART NUMBER

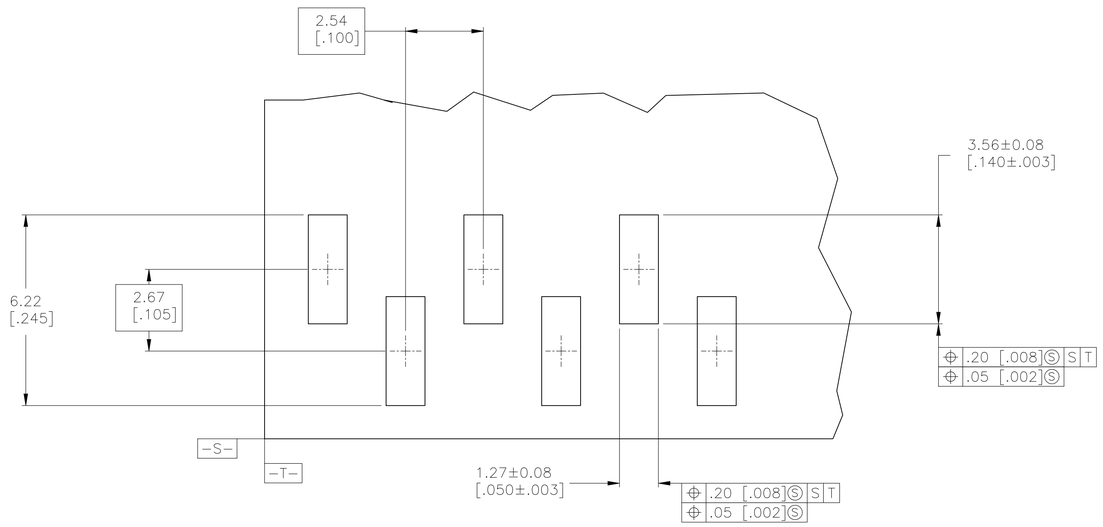

RECOMMENDED PCB LAYOUT
FOR USE WITH .008 THICK STENCIL

THIS DRAWING IS A CONTROLLED DOCUMENT.

DIMENSIONS: mm [INCHES]

TOLERANCES UNLESS OTHERWISE SPECIFIED:
0 PLC ± –
1 PLC ± –
2 PLC ± 0.13[.005]
3 PLC ± –
4 PLC ± –
ANGLES ± –

MATERIAL 3
FINISH SEE TABLE

DWN J KNAUB 9-30-94
CHK G DUBNICZKI 9-30-94
APVD G DUBNICZKI 9-30-94
PRODUCT SPEC —
APPLICATION SPEC —
WEIGHT —

TE Connectivity

NAME SURFACE MOUNT HEADER ASSY, MOD II, B/A, VERT, SR, .100 X.100 C/L, .025 SQ.POST

SIZE A1 | CAGE CODE 00779 | DRAWING NO C-146129 | RESTRICTED TO —

CUSTOMER DRAWING | SCALE 10:1 | SHEET 1 OF 1 | REV L1

4805 (1/15)