△2 TABLE 1

SUB ASSEMBLY PART NO. AND CH. CODE	NO.	PART NO. AND CH. CODE	△2 PART NAME	MATERIAL	COLOR	QTY.
△1 7283-4038-30 ETC.	①	SEE TABLE 2 △1	HS 025 12P SEALED HOUSING FEMALE	PBT	SEE TABLE 2 △1	1
	②	7158-6587	HS 025 12P SEALED FRONT HOLDER FEMALE	PBT-G	NATURAL	1
	③	7137-2848-80	HS 025 12P SEALED PACKING	SILICONE RUBBER	BROWN	1

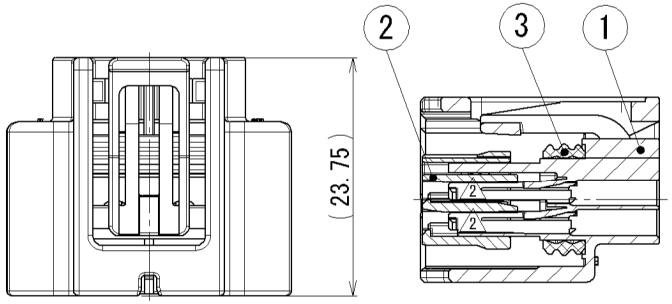

SEC. A-A

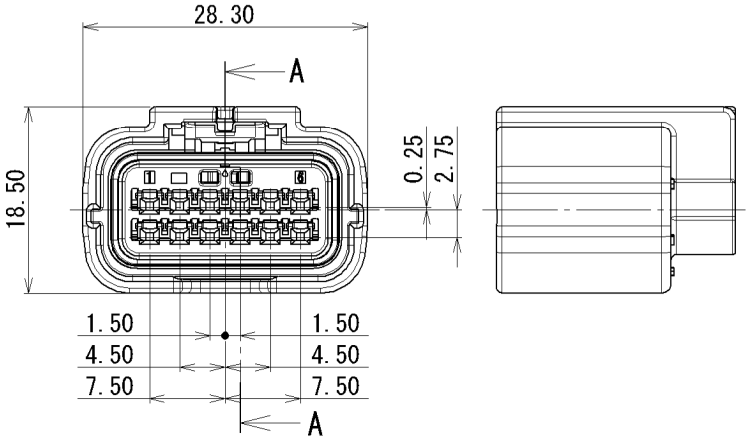

TABLE 2

	SUB ASSEMBLY PART NO. AND CH. CODE	PART NO. AND CH. CODE	COLOR
	7283-4038-30	7183-4038-30	BLACK
△1	7283-4038-40	7183-4038-40	LIGHT GRAY
△2	7283-4038-10	7183-4038-10	DARK GRAY

NOTES

△1 1. MATING PART NO. : 7282-4038-30 ETC.

2. APPLICABLE TERMINAL NO. : 7116-4415-02, 7116-4416-02, 7116-4417-02

3. APPLICABLE SEAL RUBBER NO. : 7158-3165-90, 7158-3166-60, 7158-3167-80, 7158-3168-80

4. APPLICABLE UNUSED CAVITY PLUG: 7158-3169-40

注記

△1 1. かん合相手品番： 7282-4038-30 ETC.

2. 適用端子品番 ： 7116-4415-02、7116-4416-02、7116-4417-02

3. 適用ゴム栓品番： 7158-3165-90、7158-3166-60、7158-3167-80、7158-3168-80

4. 適用防水栓品番： 7158-3169-40

△2 GENERAL TOLERANCE

	10 MAX	50 MAX	100 MAX	250 MAX	250 OVR	R5 MAX	R10 MAX	R20 MAX	R20 OVR	ANGLE	ECCENT
A	±0.15	±0.2	±0.3	±0.5	±0.75	±0.2	±0.3	±0.5	±2.5	±3°	0.1
B	±0.2	±0.3	±0.55	±0.95	±1.4					±3°	0.1
C	±0.3	±0.5	±0.8	±1.4	±2					±3°	0.15

ISSUE MARK

LET	DATE	REVISION RECORD	NO.	CHKD
△2	2017/01/10	ADDED COLOR PART NO., ETC.	C16-Z750	A.Q
△1	2005/05/18	ADDED PART NO., ETC.	C05-Z720	K.N
	2004/02/27	NEW	C04-X160	K.N

GENERAL TOLERANCE

	10MAX	50MAX	100MAX	250MAX	250OVR	ANGLE	ECCENT
A	±0.15	±0.2	±0.3	±0.5	±0.75	±30'	0.1
B	±0.2	±0.3	±0.55	±0.95	±1.4	±30'	0.1
C	±0.3	±0.5	±0.8	±1.4	±2	±30'	0.15

SPECIFIED

MASS g

CUSTOMER

CUSTOMER PART NO. | CUSTOMER DWG NO.

OFFICE | TRIAL PART NO.

VENDOR

VENDOR NO.

DWG TYPE	DWG SOURCE	DWG DATE	UNIT	SCL	ANGLE
R	NEW	2004/02/27	mm	2:1	3

APPROVED	CHECKED	CHECKED	DESIGN	DRAWN
T.MATSUNAGA			K.NIIHO	A.QUIROL
2017/01/10			2003/12/24	2017/01/10

MATL. SPEC. SEE TABLE 1 | TREAT. & FIN.

NAME △2 HS 025 12P SEALED HOUSING SUB ASSEMBLY FEMALE

PART NO. CH. CODE △1 7283-4038-30 ETC.

DWG NO. 7283-4038-30:R | SET DWG NO.

YAZAKI CORPORATION