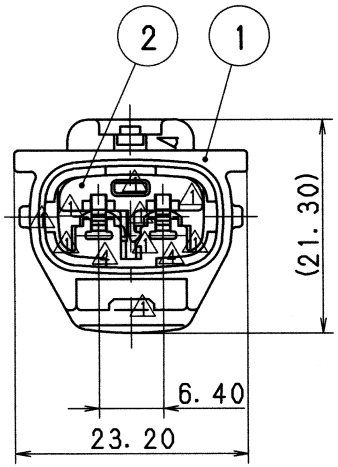

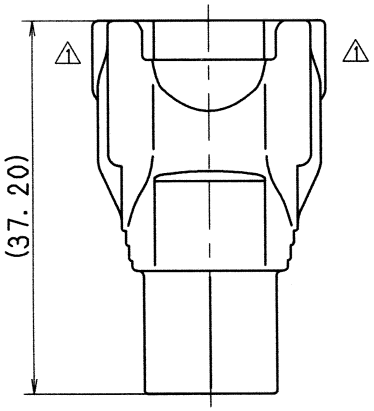

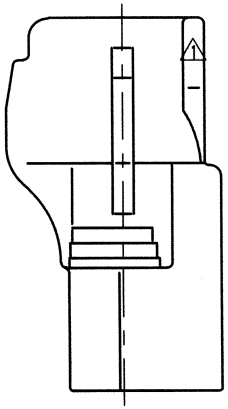

TABLE 1

SUB ASSEMBLY PART NO. AND CH. CODE	NO.	PART NO. AND CH. CODE	MATERIAL	COLOR	QTY.
7282-7026-30 ETC.	1	SEE TABLE 2	PBT	SEE TABLE 2	1
	2	7157-4102 △5 (7B57-4102)	PBT	NATURAL	1

△3 TABLE 2

SUB ASSEMBLY PART NO. AND CH. CODE	PART NO. AND CH. CODE	COLOR
△3 7282-7026, A	7182-7026	NATURAL
△2 7282-7026-10, A	7182-7026-10	DARK GRAY
7282-7026-30, A	7182-7026-30	BLACK
7282-7026-40, A △5 (7C82-7026-40, A)	7182-7026-40 △5 (7B82-7026-40)	LIGHT GRAY
△3 7282-7026-50, A	7182-7026-50	ORANGE
△3 7282-7026-60, A	7182-7026-60	GREEN
△3 7282-7026-80, A	7182-7026-80	BROWN
△3 7282-7026-90, A	7182-7026-90	BLUE

注記

1. 適用端子品番 : 7114-4025 ETC.
△4 2. 適用ゴム栓品番 : 7158-3006-90 ETC.
△3 3. 嵌合相手品番 : 7283-7026-30 ETC.
△5 4. ( ) 内品番は、エアバッグ (A/B) 回路及び特別管理回路に使用する時に適用すること。

NOTES

1. APPLICABLE TERMINAL NO. : 7114-4025 ETC.
△4 2. APPLICABLE RUBBER STOPPER NO. : 7158-3006-90 ETC.
△3 3. MATING PART NO. :7283-7026-30 ETC.
△5 4. PART NUMBERS IN PARENTHESIS SHALL BE USED FOR AIR BAG (A/B) CIRCUITS AND OTHER CIRCUITS DESIGNATED FOR SPECIAL MONITORING.

LET	DATE	REVISION RECORD	NO.	CHKD
△5	04. 03. 03	ADDED A/B PART NO. & CHANGED PART NAME	C04-X187	S. N
△4	97. 11. 28	CHANGED FORM, A	C97-N638	H. K
△3	95. 05. 25	ADDED PART NO.	C95-L791	K. O
△2	90. 08. 24	ADDED PART NO.	C90-7139	H. A
△1	89. 09. 18	CHANGED FORM	C89-L984	H. Y
	89. 06. 16	NEW	C89-L705	M. T

ISSUE MARK

GENERAL TOLERANCE

	10MAX	50MAX	100MAX	250MAX	2500VR	ANGLE	ECCENT
A	±0. 15	±0. 2	±0. 3	±0. 5	±0. 75	±30′	0. 1
B	±0. 2	±0. 3	±0. 55	±0. 95	±1. 4	±30′	0. 1
C	±0. 3	±0. 5	±0. 8	±1. 4	±2	±30′	0. 15

SPECIFIED

MASS g

CUSTOMER		MATL. SPEC. SEE TABLE 1	TREAT. & FIN.
CUSTOMER PART NO.	CUSTOMER DWG NO.	NAME △5 2. 3Ⅱ(090Ⅱ) 2P SEALED CONNECTOR HOUSING MALE SUB ASSEMBLY	
OFFICE	TRIAL PART NO.		
VENDOR			
VENDOR NO.			

DWG TYPE	DWG SOURCE	DWG DATE	UNIT	SCL	ANGLE
R	NEW	89. 04. 19	mm	△4 2/1	3

APPROVED	CHECKED	CHECKED	DESIGN	DRAWN
石井	澤	原	M. TSUJI	Y. IMAI 新倉
'04. 03. 08	'04. 03. 05	'04. 03. 04	89. 07. 15	04. 03. 03

PART NO. CH. CODE 7282-7026-30 ETC. △5 (7C82-7026-40, A)

DWG NO. 7282-7026-10:R

SET DWG NO.

YAZAKI CORPORATION