PART NO.	C	D	MATERIAL	TREAT & FIN	APPLICABLE WIRE SIZE
7114-2870	2.7	4.5	C2680 t=0.4		AV 0.5 AVS 0.3~0.5
7114-2870-02	2.7	4.5		TIN PLATED	AV 0.5 AVS 0.3~0.5
7114-2871	3.7	5.5			AV 0.85~2 AVS 0.85~2
7114-2871-02	3.7	5.5		TIN PLATED	AV 0.85~2 AVS 0.85~2
7114-2872	4.7	6.5			AV 3. AVS 3
7114-2872-02	4.7	6.5		TIN PLATED	AV 3. AVS 3

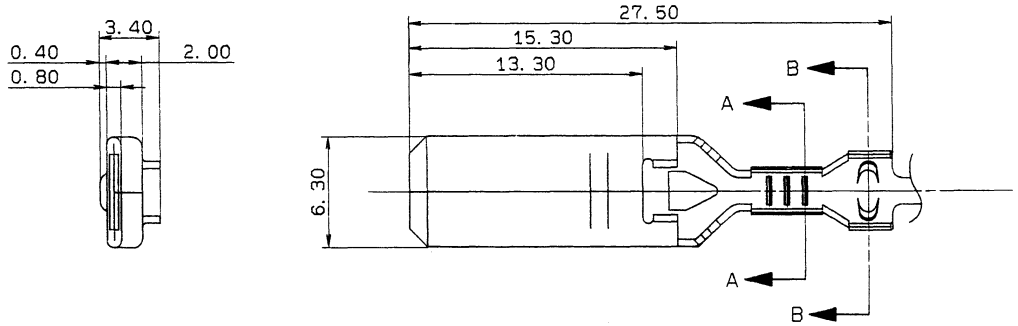

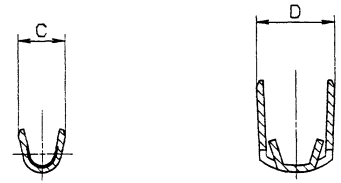

SECTION A-A

SECTION B-B

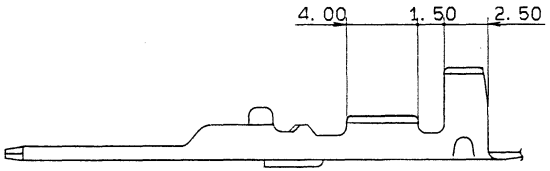

ISSUE MARK

GENERAL TOLERANCE							
	10MAX	50MAX	100MAX	250MAX	250OVR	ANGLE	ECCENT
A	±0.15	±0.2	±0.3	±0.5	±0.75	±30'	0.1
B	±0.2	±0.3	±0.55	±0.95	±1.4	±30'	0.1
©	±0.3	±0.5	±0.8	±1.4	±2	±30'	0.15
SPECIFIED						WEIGHT	g

LET	DATE	REVISION RECORD	NO.	CHKD
	90.09.07	NEW	C90-L976	M.K

CUSTOMER						
CUSTOMER PART NO.		CUSTOMER DWG NO.				
OFFICE		STDLIB NO.				
VENDOR						
VENDOR NO.						
DWG TYPE	DWG SOURCE	DWG DATE	UNIT	SCL	ANGLE	
R	NEW	90.09.07	mm	5/1	3	
APPROVED	CHECKED	CHECKED	DESIGN	DRAWN		
	小木		SAKAI	T.MAKITA		
90.9.14	90.9.7	90.09.07	82.08.02	90.09.07		

MATL. SPEC. SEE TABLE

TREAT. & FIN.

NAME M TYPE TERMINAL (M)

PART NO. 7114-2870 ETC.

DWG NO. 7114-2870:R

TRIAL PART NO.

YAZAKI CORPORATION