SUB ASSEMBLY PART NO. AND CH. CODE	NO.	PART NO. AND CH. CODE	MATERIAL	COLOR	MATING PART NO.
7223-1824-40	1	7123-1824-40	PA 66	GRAY	7122-1824-40
	2	7137-2320-80	SILICONE RUBBER	BROWN	
7223-1824-50	1	7123-1824-50	PA 66	ORANGE	7122-1824-50
	2	7137-2320-80	SILICONE RUBBER	BROWN	
7223-1824-80	1	7123-1824-80	PA 66	BROWN	5 7122-1824-40
	2	5 7137-2322-60	NBR	GREEN	

注記

1. 適用端子品番：7116-1232 ETC.
2. 適用リヤホルダ品番：7157-6520-80

NOTES

1. APPLICABLE TERMINAL NO. :7116-1232 ETC.
2. APPLICABLE REAR HOLDER NO. :7157-6520-80.

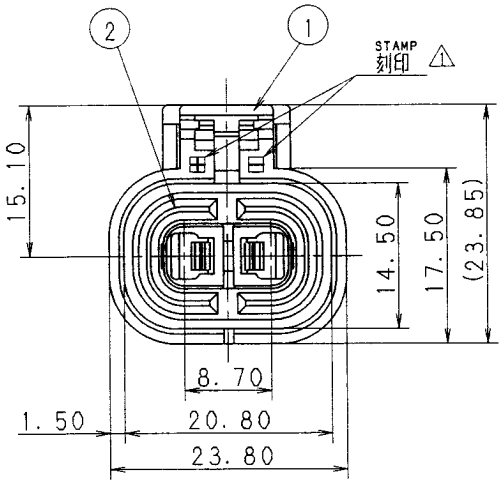

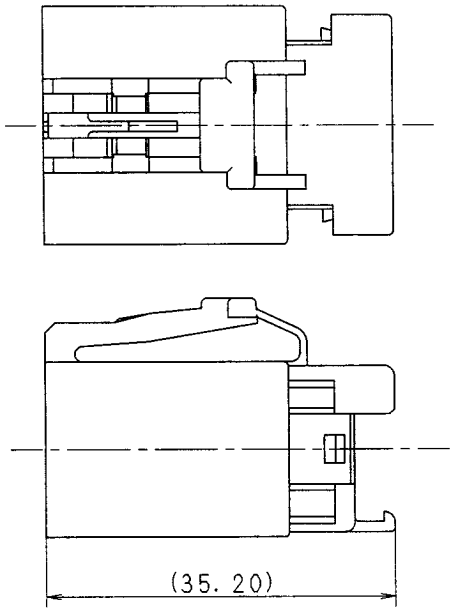

LET	DATE	REVISION RECORD	NO.	CHKD
5	99.08.24	CORRECTED AN ERROR	C99-M290	H.K
4	95.10.30	CORRECTED AN ERROR	C95-M833	Y.Y
3	93.12.10	ADDED COLOR PART NO.	C93-7156	甲斐
2	91.02.25	ADDED COLOR PART NO.	C91-6368	幸松
1	89.08.30	ADDED STAMP	C89-7257	矢部
	88.12.12	NEW	8MC-3190	T.M

GENERAL TOLERANCE

	10MAX	50MAX	100MAX	250MAX	2500VR	ANGLE	ECCENT
A	±0.15	±0.2	±0.3	±0.5	±0.75	±30'	0.1
B	±0.2	±0.3	±0.55	±0.95	±1.4	±30'	0.1
C	±0.3	±0.5	±0.8	±1.4	±2	±30'	0.15

SPECIFIED

MASS g

CUSTOMER

CUSTOMER PART NO.

CUSTOMER DWG NO.

OFFICE

TRIAL PART NO.

VENDOR

VENDOR NO.

DWG TYPE	DWG SOURCE	DWG DATE	UNIT	SCL	ANGLE
R	NEW	88.11.14	mm	2/1	3

APPROVED	CHECKED	CHECKED	DESIGN	DRAWN
99.08.27	99.08.24	99.08.28	SAKAI 85.06.10	Y. HATORI 99.08.24

MATL. SPEC. SEE TABLE

TREAT. & FIN.

NAME 2 W TYPE CONNECTOR 2PF

SUB ASSEMBLY (W02FW, -OR, -BR)

PART NO. CH. CODE 2 7223-1824-40 ETC.

DWG NO. 1 7223-1824-40:R

SET DWG NO.

YAZAKI CORPORATION

ISSUE MARK