| YAZAKI PART NO. | $W_1$ | $H_1$ | $W_2$ | $H_2$ | APPLICABLE WIRE SIZE |
|---|---|---|---|---|---|
| 7116-2990-02 | 2.3 | (2.6) | 3.7 | (2.9) | ⚠CAVUS, CAVS 0.3~0.5 |
| 7116-2991-02 | 3.1 | (3.1) | 5.5 | (4.9) | CAVUS, CAVS, AVS 0.85~1.25 |
| 7116-2992-02 | 4.3 | (4.4) | 6.5 | (6.4) | AVS 2~3, AVSS 2 |

注記

1. かん合相手品番 : 7114-2882-02
: 7114-2883-02
: 7114-2872-02

NOTE

1. MATING PART NO. : 7114-2882-02
: 7114-2883-02
: 7114-2872-02

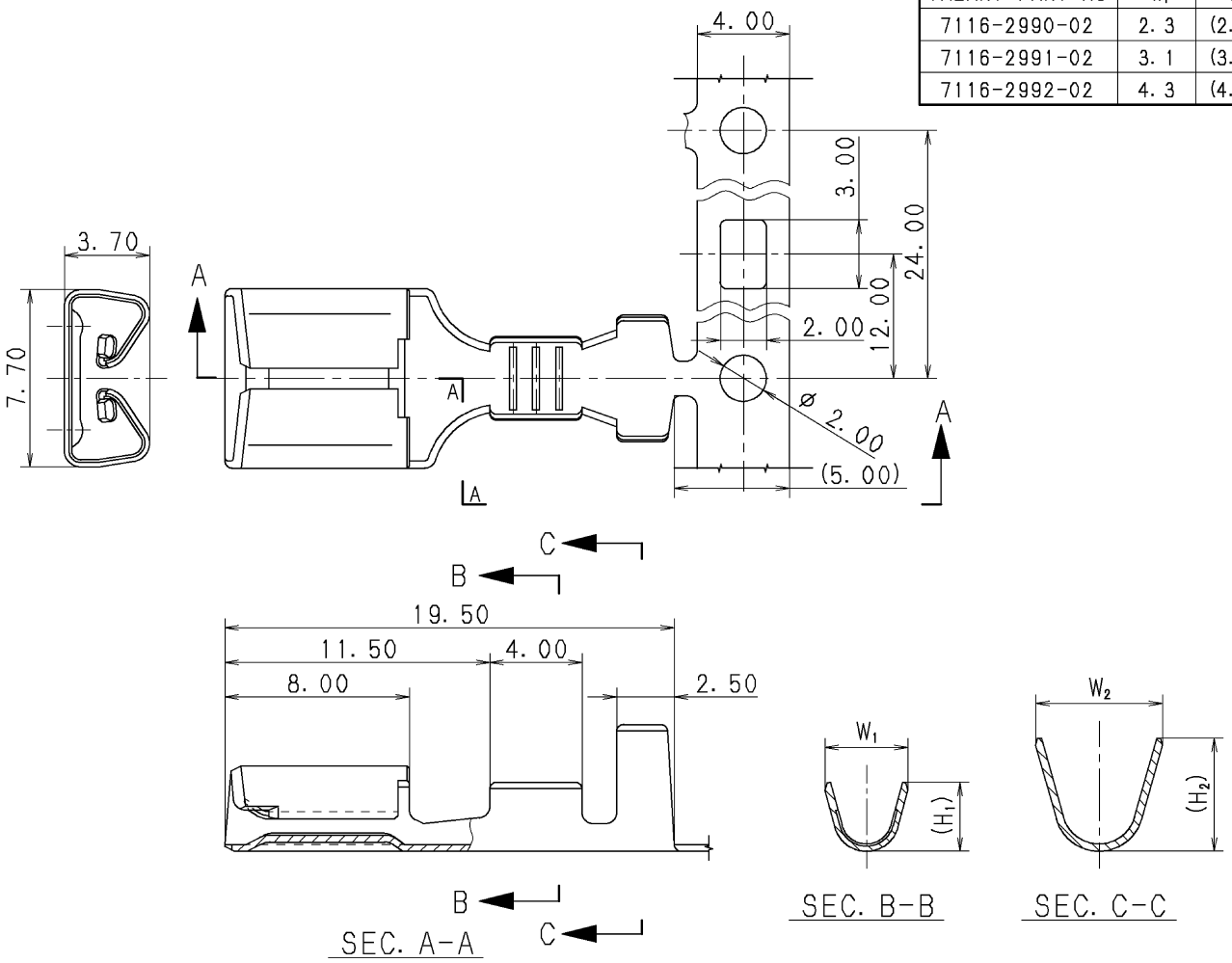


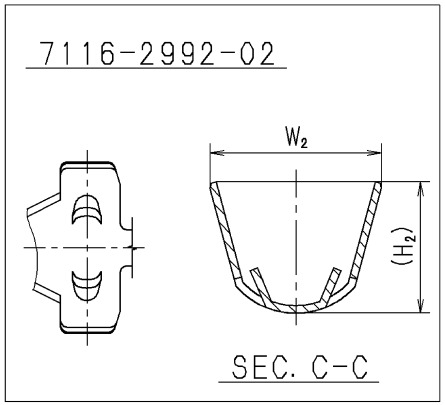


| LET | DATE | REVISION RECORD | NO. | CHKD |
|---|---|---|---|---|
| ⚠ | 2011/08/28 | CHANGED NOTE ETC. | C11-Z601 | G. M |
| | 1998/03/17 | NEW | C98-L142 | H. Y |

GENERAL TOLERANCE

| | 10MAX | 50MAX | 100MAX | 250MAX | 2500VR | ANGLE | ECCENT |
|---|---|---|---|---|---|---|---|
| A | ±0.15 | ±0.2 | ±0.3 | ±0.5 | ±0.75 | ±30′ | 0.1 |
| B | ±0.2 | ±0.3 | ±0.55 | ±0.95 | ±1.4 | ±30′ | 0.1 |
| Ⓒ | ±0.3 | ±0.5 | ±0.8 | ±1.4 | ±2 | ±30′ | 0.15 |

SPECIFIED

MASS g

CUSTOMER

CUSTOMER PART NO. | CUSTOMER DWG NO.

OFFICE | TRIAL PART NO.

VENDOR

VENDOR NO.

| DWG TYPE | DWG SOURCE | DWG DATE | UNIT | SCL | ANGLE |
|---|---|---|---|---|---|
| R | NEW | 1998/01/28 | mm | 5:1 | 3 |

| APPROVED | CHECKED | CHECKED | DESIGN | DRAWN |
|---|---|---|---|---|
| M. KASHIYAMA | ——— | Y. FUKASE | H. YOSHIDA | G. MAGNAYON |
| 2011/08/28 | ——— | 2011/08/28 | 1997/12/25 | 2011/08/28 |

MATL. SPEC. ⚠BRASS (t=0.30)

TREAT. & FIN. ⚠TIN PLATING

NAME MF-SN TERMINAL

PART NO. / CH. CODE 7116-2990-02 ETC.

DWG NO. 7116-2990-02:R

SET DWG NO.

YAZAKI CORPORATION

ISSUE MARK