NO.	YAZAKI PART NO.	C	D	E	F	APPLICABLE WIRE
1	7116-3250	6.60	7.20	9.60	9.80	AV 5~8
2	7116-3251	4.80	5.20	7.20	8.80	AV 3
3	7116-3252	4.00	4.30	7.20	8.80	FLW 0.85~2

NOTE:
1. MATING TERMINAL NO. : 7114-3250 ETC.

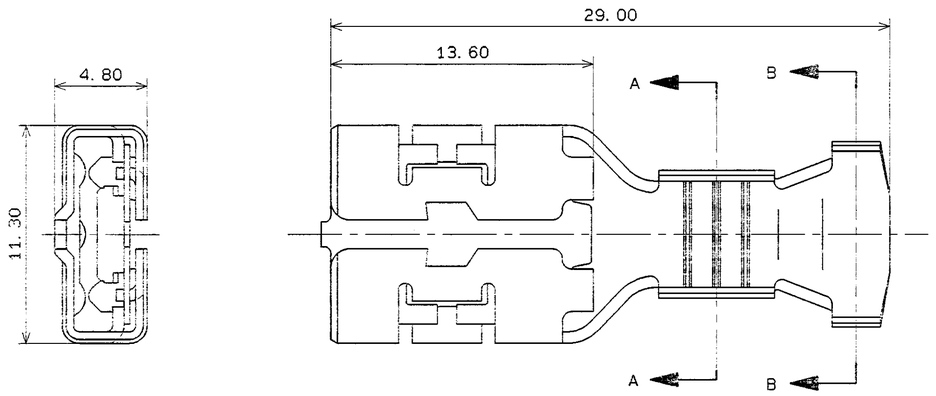

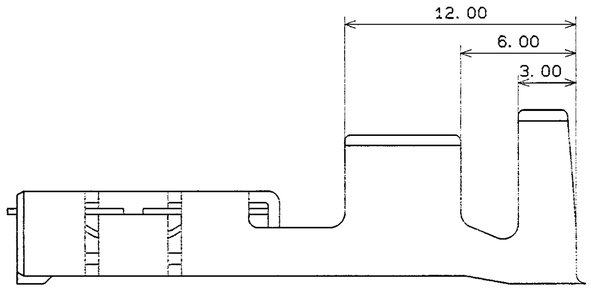

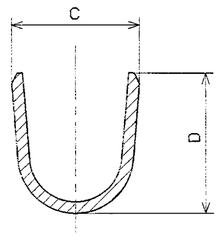

SECTION A-A

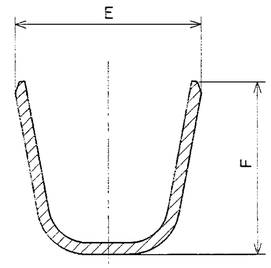

SECTION B-B

ISSUE MARK

CUSTOMER				MATL. SPEC.	COPPER ALLOY
CUSTOMER PART NO.		CUSTOMER DWG NO.		TREAT. & FIN.	
OFFICE		STDLIB NO.		NAME	L TYPE FEMALE TERMINAL
VENDOR					
VENDOR NO.					
	DWG SOURCE	DWG DATE	UNIT	SCL	ANGLE
R	7116-3250:MA	04-03-91	mm	5/1	3
APPROVED	CHECKED	CHECKED	DESIGN	DRAWN	
04-29-91	4-18-91	4-5-91		4-3-91	

PART NO. 7116-3250 ETC.

DWG NO. 7116-3250:RA

YAZAKI CORPORATION

LET	DATE	REVISION RECORD	NO.	CHKD
	04-03-91	NEW	C91-A090	J. J.

DRAWING NUMBER

DLD CORPORATION • IRVINE, CALIFORNIA
REORDER BY NUMBER 07SAR

7116-3250:RA

PLAN HOLD CORPORATION • IRVINE, CALIFORNIA
REORDER BY NUMBER 07SAR

DRAWING NUMBER

PLAN HOLD CORPORATION • IRVINE, CALIFORNIA
REORDER BY NUMBER 07SAR