THIS DRAWING IS UNPUBLISHED. RELEASED FOR PUBLICATION 20
© COPYRIGHT 20 BY - ALL RIGHTS RESERVED.

REVISIONS

P	LTR	DESCRIPTION	DATE	DWN	APVD
	A	RELEASED TO PRODUCTION (REV A)	20NOV2014	PS	JK

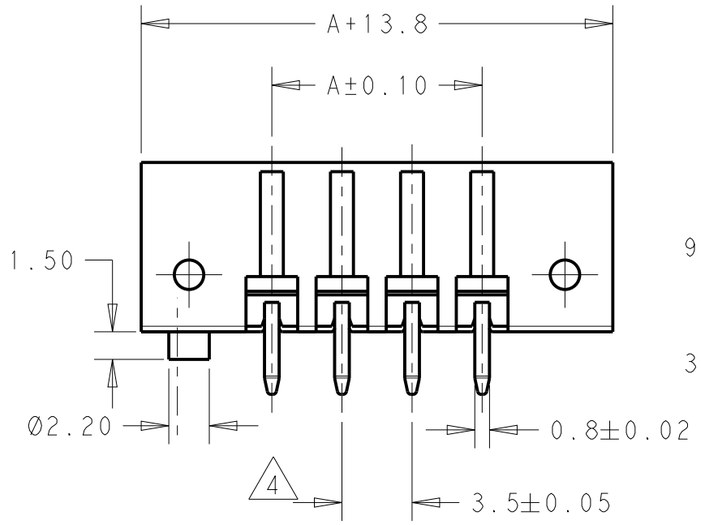

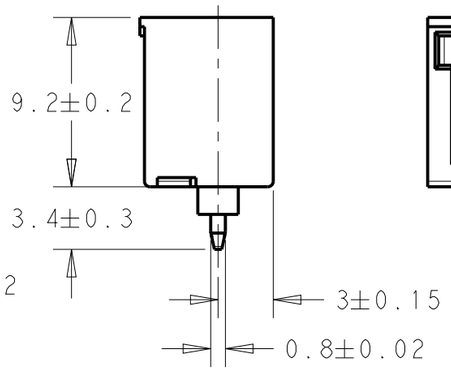

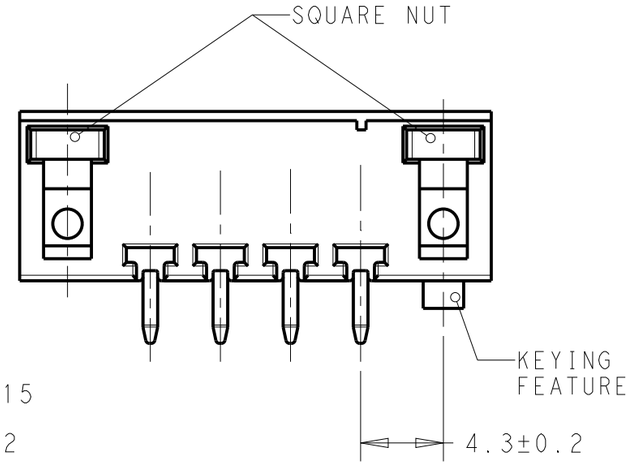

NOTES:

1. MATERIALS AND FINISH
   HOUSING : PA 6.6, UL 94-V0, COLOR GREEN
   TERMINAL : PHOSPHOR BRONZE, TIN PLATED
2. CONNECTOR ASSEMBLY INCLUDED 2 SQUARE NUTS LOADED IN CAVITY
3. SUITABLE FOR 1.6-2.4 mm. PC BOARD THICKNESS
4. NOT CUMULATIVE TOLERANCE
5. ELECTRICAL:
   VOLTAGE RATING 300V
   CURRENT RATING 13.5 A
6. MECHANICAL:
   INSERTION FORCE PER POLE: MAX 3N
   WITHDRAWAL FORCE PER POLE:MIN 1.5N
7. ENVIRONMENTAL:-40°C/+110°C [-40°F +230°F]

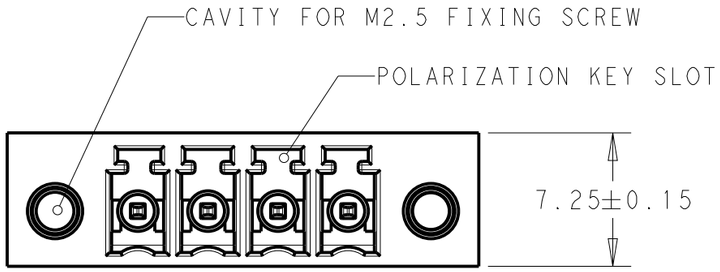

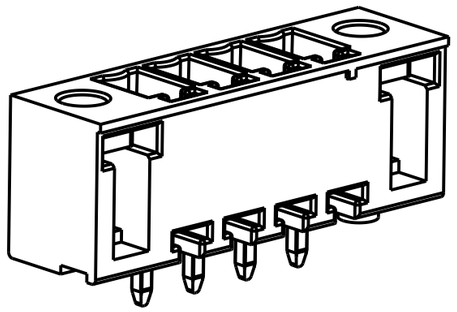

1986799-4 AS SHOWN

DIM A	NO OF POS	PART NUMBER
38.5	12	1-1986799-2
35.0	11	1-1986799-1
31.5	10	1-1986799-0
28.0	9	1986799-9
24.5	8	1986799-8
21.0	7	1986799-7
17.5	6	1986799-6
14.0	5	1986799-5
10.5	4	1986799-4
7.0	3	1986799-3
3.5	2	1986799-2

RECOMMENDED PC BOARD LAYOUT

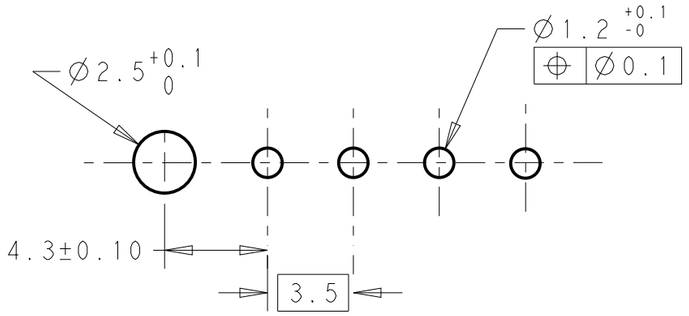

THIS DRAWING IS A CONTROLLED DOCUMENT.

DIMENSIONS: mm

TOLERANCES UNLESS OTHERWISE SPECIFIED:
0 PLC ±-
1 PLC ±0.3
2 PLC ±0.25
3 PLC ±-
4 PLC ±-
ANGLES ±2°

MATERIAL 1
FINISH 1

DWN 26SEP2013 KIRAN HOLAL
CHK 26SEP2013 MERCURIO, MAURIZIO
APVD 26SEP2013 MERCURIO, MAURIZIO
PRODUCT SPEC 108-20166
APPLICATION SPEC 114-20079
WEIGHT -

Customer Drawing

TE Connectivity

NAME TERMINAL BLOCK,HEADER ASSEMBLY STRAIGHT,3.5 MM PITCH WITH KEYING FEAT

SIZE	CAGE CODE	DRAWING NO	RESTRICTED TO
A3	00779	C-1986799	-

SCALE 3:1 SHEET 1 OF 1 REV A