THIS DRAWING IS UNPUBLISHED. RELEASED FOR PUBLICATION AUG ,2006.
© COPYRIGHT – BY TYCO ELECTRONICS CORPORATION. ALL RIGHTS RESERVED.

LOC	DIST
DW	—

REVISIONS

P	LTR	DESCRIPTION	DATE	DWN	APVD
	C	REVISED. (ECR-12-010450)	06MAR13	JC	WK

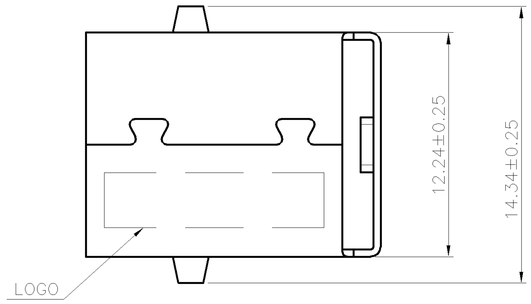

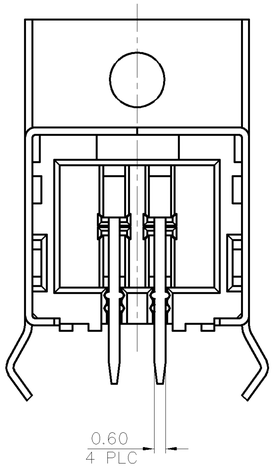

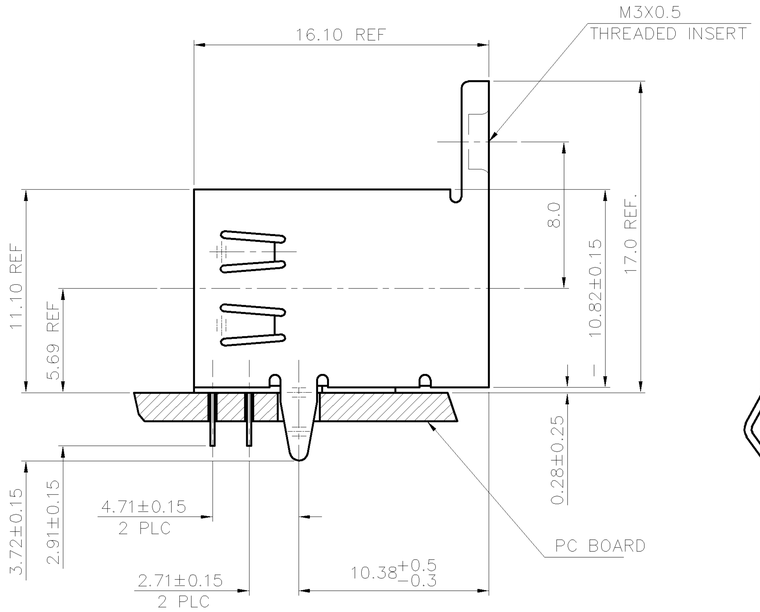

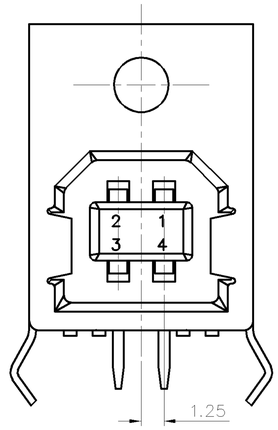

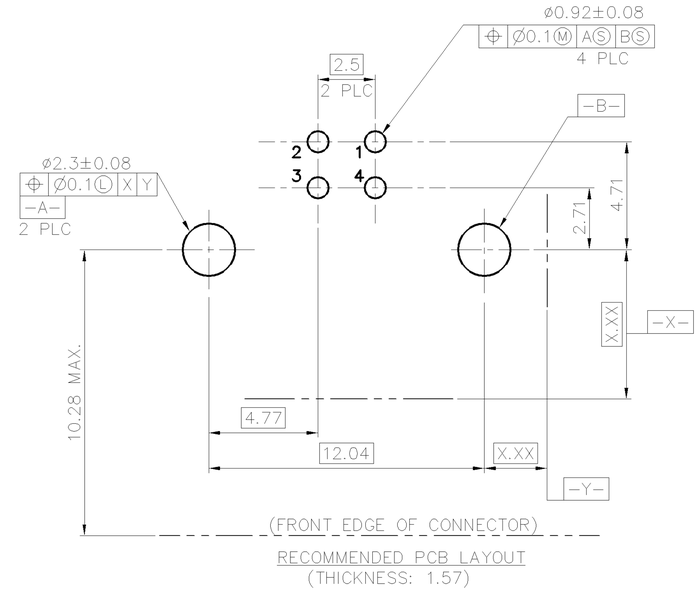

RECOMMENDED PCB LAYOUT
(THICKNESS: 1.57)

NOTE:

1. MATERIAL:
   HOUSING: THERMOPLASTIC, UL 94V-0, COLOR: BLACK.
   CONTACTS: PHOSPHOR BRONZE, THICKNESS=0.25mm.
   SHELL: PHOSPHOR BRONZE, THICKNESS=0.4mm.
2. FINISH:
   CONTACT : GOLD FLASH OVER
   30u" PALLADIUM-NICKEL PLATING ON CONTACT AREA,
   80u" MIN. MATTE-TIN PLATED ON SOLDER TAILS,
   50u" MIN. NICKEL PLATED UNDERPLATED ALL OVER.
   SHELL : 100u"~200u" BRIGHT-TIN PLATED OVER 50u" MIN. NICKLE.
3. SPECIFICATIONS:
   TORQUE STRENGTH: 3Kg-cm MIN.
   ALLOW FOR A PANEL THICKNESS OF 2.67MM MAX., IF
   THE RECEPTACLE CONNECTOR IS MOUNTED BEHIND A PANEL.
4. X.XX DIMENSIONS ESTABLISHED BY CUSTOMER.
5. WAVE SOLDER CAPABLE TO 240°C PER TE SPEC 109-202, CONDITION A.

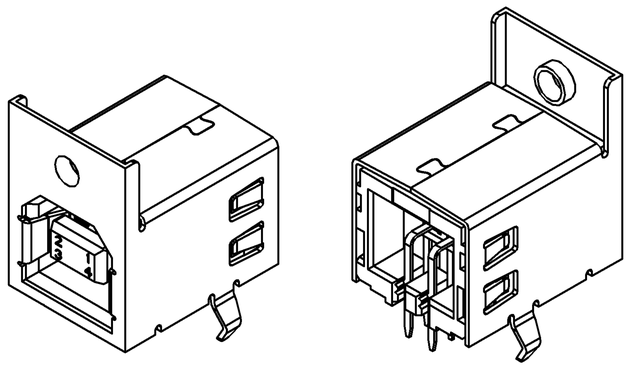

1734091-1
PART NUMBER

THIS DRAWING IS A CONTROLLED DOCUMENT.

DIMENSIONS: MM

TOLERANCES UNLESS OTHERWISE SPECIFIED:

0 PLC	± 0.38
1 PLC	± 0.25
2 PLC	± 0.13
3 PLC	± 0.05
4 PLC	± –
ANGLES	± 3°

MATERIAL: SEE NOTE
FINISH: SEE NOTE

DWN	O. HU	08SEP2005
CHK	S. HOU	08SEP2005
APVD	W.J. KE	08SEP2005

PRODUCT SPEC: 108-57085
QUALIFICATION TEST REPORT: 501-57043
WEIGHT: –

TE Connectivity

NAME: USB CONN., RIGHT ANGLE, SHIELD, FLANGE, B TYPE

SIZE	CAGE CODE	DRAWING NO	RESTRICTED TO
A3	00779	C-1734091	—

CUSTOMER DRAWING | SCALE — | SHEET 1 OF 2 | REV C

THIS DRAWING IS UNPUBLISHED. RELEASED FOR PUBLICATION AUG ,2006.
© COPYRIGHT – BY TYCO ELECTRONICS CORPORATION. ALL RIGHTS RESERVED.

LOC	DIST
DW	—

REVISIONS

P	LTR	DESCRIPTION	DATE	DWN	APVD
		SEE SHEET 1.			

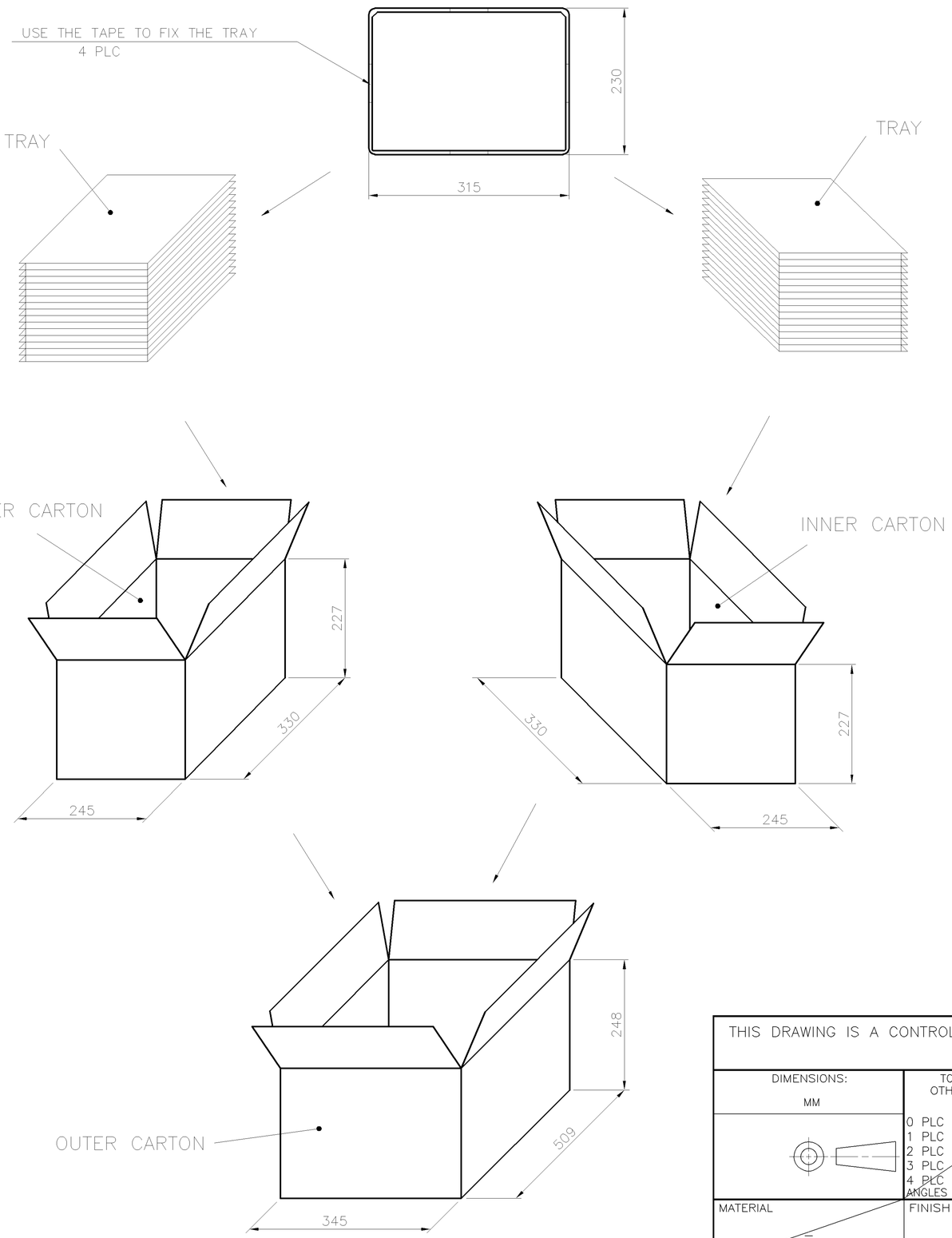

12.5	11.5	2400	1200 (12 TRAY)	100
G.W(KGS)	N.W(KGS)	PCS/ OUTER BOX	PCS/ INNER BOX	PCS/ TRAY

THIS DRAWING IS A CONTROLLED DOCUMENT.

DIMENSIONS: MM

TOLERANCES UNLESS OTHERWISE SPECIFIED:

0 PLC	± –
1 PLC	± –
2 PLC	± –
3 PLC	± –
4 PLC	± –
ANGLES	± –

MATERIAL –

FINISH –

DWN

CHK

APVD

PRODUCT SPEC —

QUALIFICATION TEST REPORT —

WEIGHT —

TE Connectivity

NAME

USB CONN., RIGHT ANGLE, SHIELD, FLANGE, B TYPE

SIZE	CAGE CODE	DRAWING NO	RESTRICTED TO
A3	00779	C-1734091	—

CUSTOMER DRAWING

SCALE —

SHEET 2 OF 2

REV C