PART NO. AND CH. CODE	②W_1±0.4	②W_2±0.4	H_1	H_2	X	WIRE SIZE
7114-4025, A ③(7B14-4025, A)	2.60	5.20	②(2.44)	②(4.13)	0.50	AVS 0.3~AVS 0.5 EQUIVALENT
7114-4026, A ④(7B14-4026, A)	3.30	5.30	②(3.06)	②(4.00)	0.80	AVS 0.5~AVS 1.25 EQUIVALENT
7114-4027, A ④(7B14-4027, A)	4.30	6.00	②(4.12)	②(5.02)	1.00	AVSS 2 EQUIVALENT

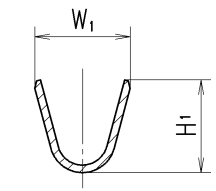

SEC. P-P

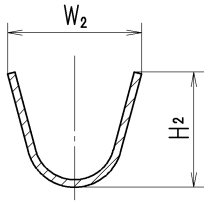

SEC. Q-Q

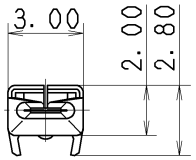

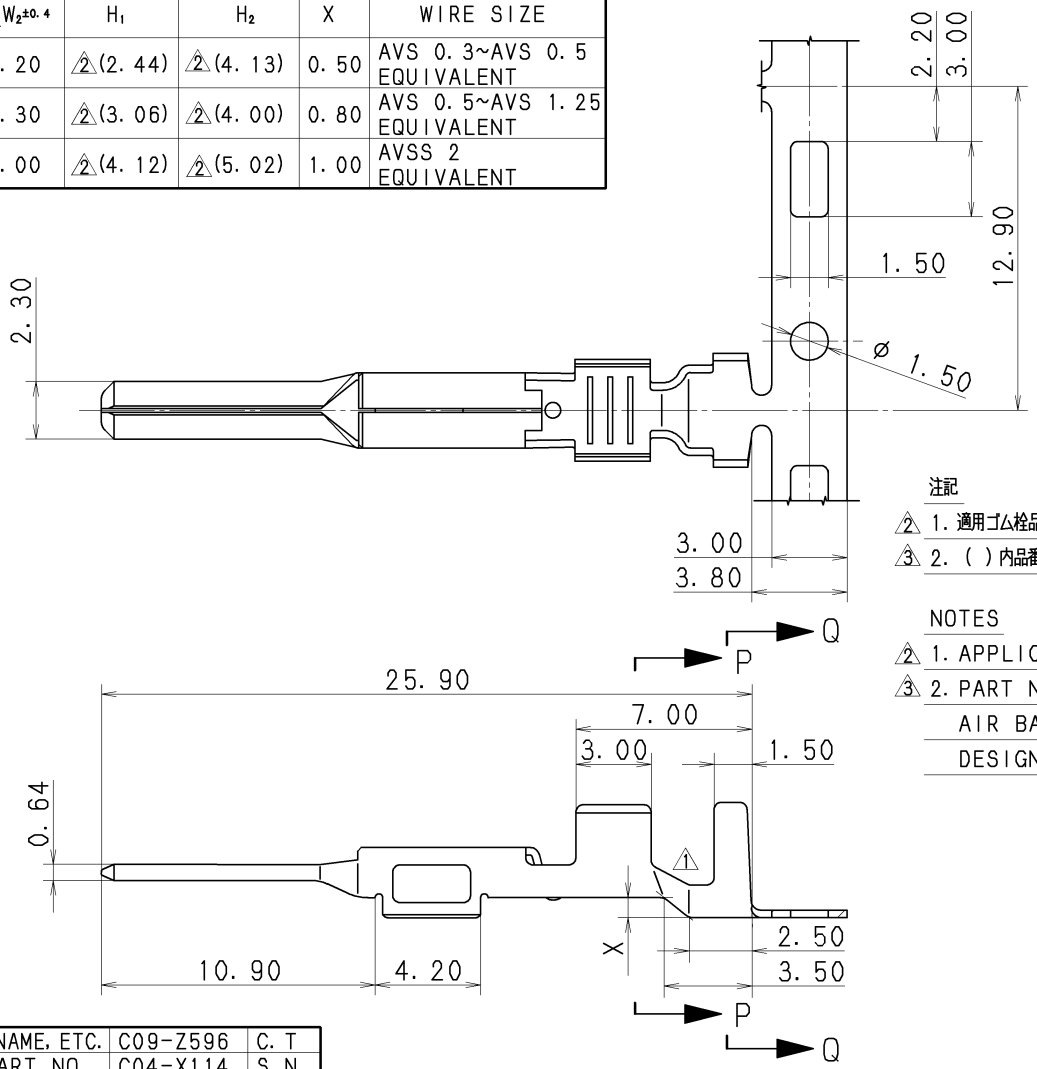

注記

② 1. 適用ゴム栓品番：7158-3006-90 ETC.

③ 2. ( ) 内品番は、エアバック (A/B) 回路及び特別管理回路に使用する時に適用すること.

NOTES

② 1. APPLICABLE RUBBER STOPPER NO. :7158-3006-90 ETC.

③ 2. PART NUMBERS IN PARENTHESIS SHALL BE USED FOR AIR BAG (A/B) CIRCUITS AND OTHER CIRCUITS DESIGNATED FOR SPECIAL MONITORING.

LET	DATE	REVISION RECORD	NO.	CHKD
⑤	09.08.19	CHANGED PART NAME, ETC.	C09-Z596	C.T
④	04.03.03	ADDED A/B PART NO.	C04-X114	S.N
③	01.06.06	ADDED A/B PART NO.	C01-X536	E.F
②	98.07.14	CHANGED DIMENSION	C97-N455	H.K
①	97.06.03	CHANGED FORM, A	C97-L889	H.K
	88.07.18	NEW	8MC-0810	Y.S

ISSUE MARK

GENERAL TOLERANCE

	10MAX	50MAX	100MAX	250MAX	2500VR	ANGLE	ECCENT
A	±0.15	±0.2	±0.3	±0.5	±0.75	±30′	0.1
B	±0.2	±0.3	±0.55	±0.95	±1.4	±30′	0.1
C	±0.3	±0.5	±0.8	±1.4	±2	±30′	0.15

SPECIFIED

MASS

CUSTOMER

CUSTOMER PART NO.

CUSTOMER DWG NO.

OFFICE

TRIAL PART NO.

VENDOR

VENDOR NO.

DWG TYPE	DWG SOURCE	DWG DATE	UNIT	SCL	ANGLE
R	NEW	88.07.12	mm	5/1	3

APPROVED	CHECKED	CHECKED	DESIGN	DRAWN
M. YAMANASHI	S. SUZUKI	C. TORII	M. TSUJI	M. MORAL
09.08.19	09.08.19	09.08.19	87.03.04	09.08.19

MATL. SPEC. ⑤BRASS (t=0.30)

TREAT. & FIN. ⑤TIN PLATING

NAME ⑤2.3Ⅱ SEALED TERMINAL MALE

PART NO. CH. CODE ③7114-4025 ETC. ④(7B14-4025 ETC.)

DWG NO. 7114-4025:R

SET DWG NO.

YAZAKI CORPORATION