THIS DRAWING IS UNPUBLISHED. RELEASED FOR PUBLICATION -,- .
© COPYRIGHT - By - ALL RIGHTS RESERVED.

REVISIONS

P	LTR	DESCRIPTION	DATE	DWN	APVD
	H2	REVISED PER ECO-16-001997	15FEB2016	NK	DR
	H3	REVISED PER ECO-17-015741	30OCT2017	RS	DR

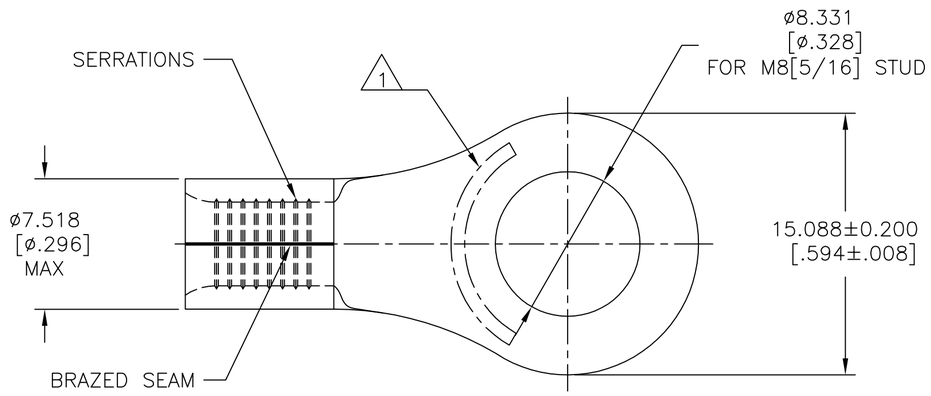

AMP WIRE RANGE	E13288 Listed
8 AWG SOLID OR STRANDED	8 AWG STRANDED

LR7189 Certified	MILITARY P/N AND CLASS
8 AWG SOLID OR STRANDED	NOT APPLICABLE

1 STAMP AMP 8* APPROX AS SHOWN.

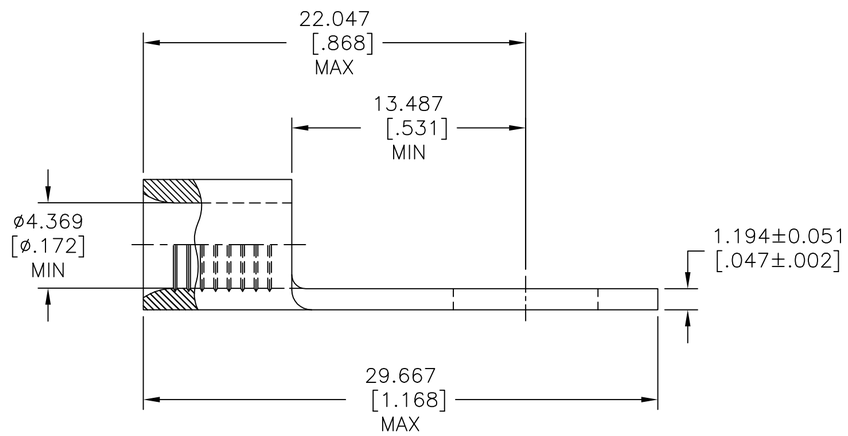

33462

100	LOOSE PIECE, BOX	8-33462-1
1000	MOUNTED ON TAPE, REEL	2-33462-1
100	LOOSE PIECE	33462
QTY	PACKAGE TYPE	PART NO

AMP INCORPORATED
CUSTOMER SERVICE SYSTEMS

FOR ADDITIONAL PRODUCT INFORMATION OR COPIES OF DRAWINGS AND TECHNICAL DOCUMENTS	PRODUCT INFORMATION CENTER 1-800-522-6752
FOR APPLICATION TOOLING INFORMATION	TOOLING ASSISTANCE CENTER 1-800-722-1111
FOR ORDER ENTRY	1-800-526-5142

MAX RECOMMENDED OPERATING TEMPERATURE: 170°C[338°F]MAX

VOLTAGE RATING: NOT APPLICABLE

WIRE CROSS SECTIONAL AREA RANGE: 6.64-10.5mm²[13,100-20,800] CIR MILS SOLID OR STRANDED

THIS DRAWING IS A CONTROLLED DOCUMENT.

DIMENSIONS: mm [INCHES]

TOLERANCES UNLESS OTHERWISE SPECIFIED:
0 PLC ± -
1 PLC ± -
2 PLC ± -
3 PLC ± 0.127[.005]
4 PLC ± -
ANGLES ± -

MATERIAL: COPPER PER ASTM B-152 ANNEALED

FINISH: TIN PLATE 0.00254[.000100] MIN THK PER ASTM B545

DWN TA BRINKMAN 3-24-93
CHK DA PATTERSON 3-24-93
APVD DE MILLER 3-24-93
PRODUCT SPEC UL486 A-B
APPLICATION SPEC —
WEIGHT —

TE Connectivity

NAME: TERMINAL, RING TONGUE, SOLISTRAND 8 AWG

SIZE	CAGE CODE	DRAWING NO	RESTRICTED TO
A2	00779	C-33462	—

CUSTOMER DRAWING | SCALE 4:1 | SHEET 1 OF 1 | REV H3

1471-9 (1/15)