PART NO.	COLOR
7123-6520-40	GRAY
7123-6520-50	ORANGE
7123-6520-80	BROWN
7123-6520-90	BLUE

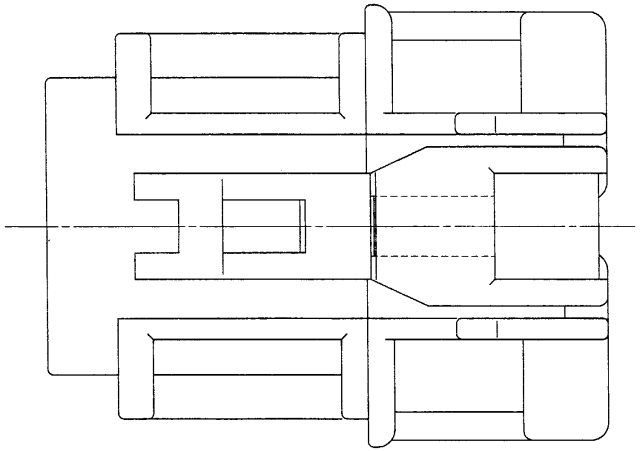

注記

1) 嵌合オスハウジング品番 :7222-6520-40 ETC.
2) 適用メスターミナル品番 :7116-2873-02, 7116-2874-02
3) 適用ゴム栓品番 :7157-3576-60, 7157-3577-90

NOTES

1) MATING MALE HOUSING NO.
:7222-6520-40 ETC.
2) APPLICABLE FEMALE TERMINAL NO.
:7116-2873-02, 7116-2874-02
3) APPLICABLE RUBBER SEAL NO.
:7157-3576-60, 7157-3577-90

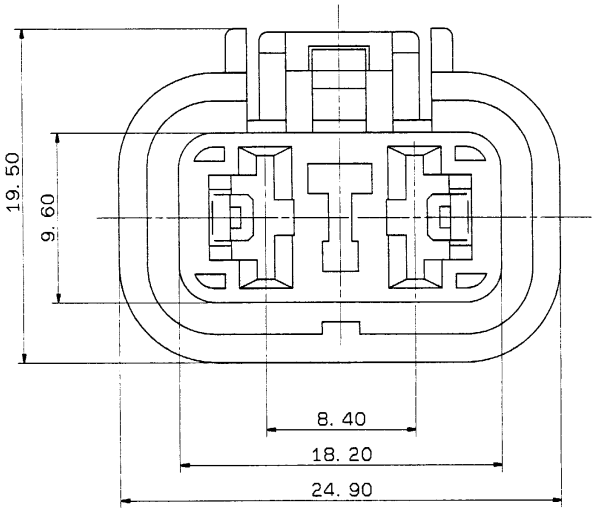

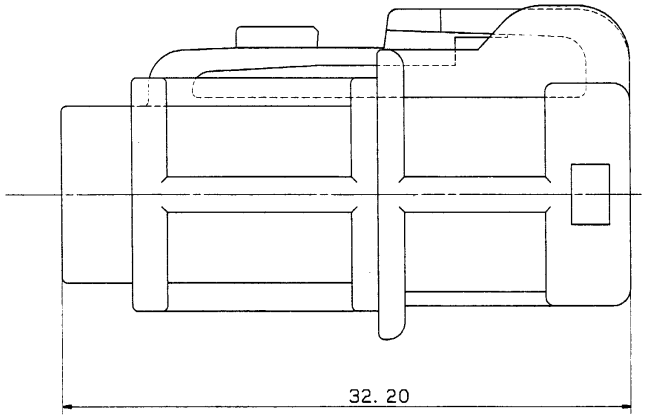

ISSUE MARK

1	92. 07. 01	CHANGED DWG NO.	C92-6642	H. Y
-	88. 11. 21	N E W	8MC-3423	M. M
LET	DATE	REVISION RECORD	NO.	CHKD

GENERAL TOLERANCE

	10MAX	50MAX	100MAX	250MAX	2500VR	ANGLE	ECCENT
A	±0.15	±0.2	±0.3	±0.5	±0.75	±30'	0.1
B	±0.2	±0.3	±0.55	±0.95	±1.4	±30'	0.1
C	±0.3	±0.5	±0.8	±1.4	±2	±30'	0.15

SPECIFIED

MASS g

CUSTOMER						
CUSTOMER PART NO.		CUSTOMER DWG NO.				
OFFICE		TRIAL PART NO.				
VENDOR		087623-4073				
VENDOR NO.						
DWG TYPE	DWG SOURCE	DWG DATE	UNIT	SCL	ANGLE	
R	N E W	88. 11. 29	mm	5/1	3	
APPROVED	CHECKED	CHECKED	DESIGN	DRAWN		
92.7.01	92 7.1	92.7.1	88. 10. 26	92.07.01		

MATL. SPEC. PBT

TREAT. & FIN.

NAME WPC 250 2PF HOUSING

PART NO. 7123-6520-40 ETC.

DWG NO. 7123-6520-40:R ⚠1

YAZAKI CORPORATION