THIS DRAWING IS UNPUBLISHED. RELEASED FOR PUBLICATION 2011
© COPYRIGHT 2011 - ALL RIGHTS RESERVED.

LOC	DIST
AI	-

REVISIONS

P	LTR	DESCRIPTION	DATE	DWN	APVD
	A	REVISED PER ECO-12-002880	14FEB12	KH	MS

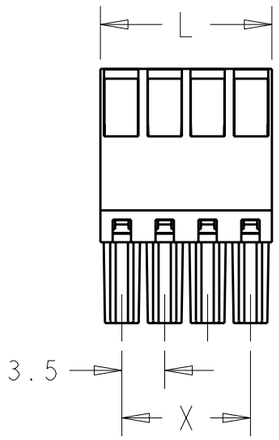

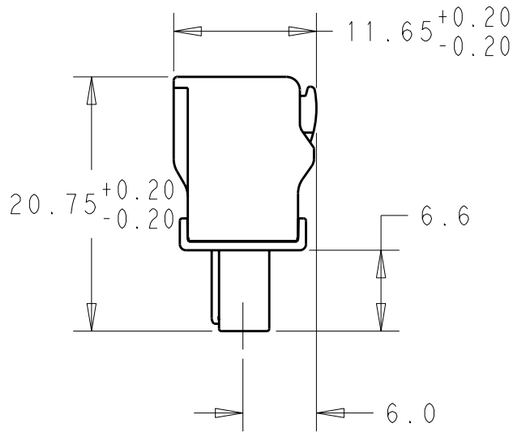

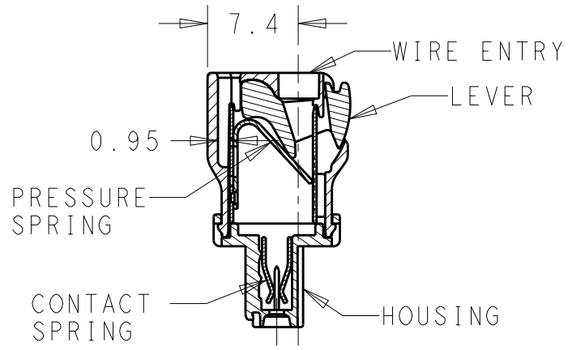

SECTION A-A

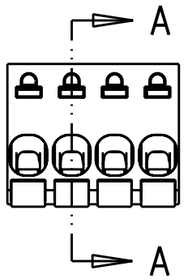

MATERIALS:
HOUSING-POLYAMIDE, COLOR-GREEN
LEVER-POLYAMIDE, COLOR ORANGE
CONTACT SPRING-COPPER ALLOY-LEAD FREE TIN PLATED
CLAMPING SPRING-STEEL

MECHANICAL
INSERTION FORCE PER POLE- 3 NEWTON MAX
WITHDRAWAL FORCE PER POLE- 1.5 NEWTON MIN
STRIPPING LENGTH- 10.5 TO 11.5 MM
OPERATING TEMPERATURE--40°C TO +110°C

ELECTRICAL
WIRE SIZE= 30 TO 14 AWG SOLID OR STRANDED
VOLTAGE RATING- 300 VOLTS
CURRENT RATING- 11 AMP STRANDED; 9AMP SOLID
CONTACT RESISTANCE-15 MILLOHM MAX
INSULATION RESISTANCE-10^9 OHMS MIN (500V DC)

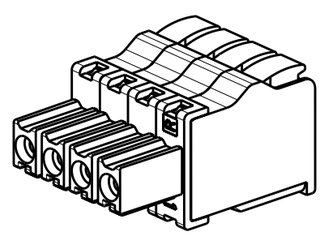

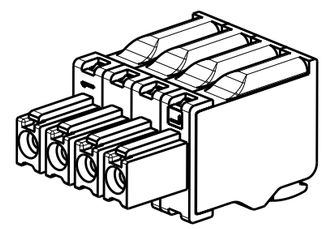

DIM X	DIM L	POLE	PART NUMBER
84.00	87.50	25	2-1986693-5
80.50	84.00	24	2-1986693-4
77.00	80.50	23	2-1986693-3
73.50	77.00	22	2-1986693-2
70.00	73.50	21	2-1986693-1
66.50	70.00	20	2-1986693-0
63.00	66.50	19	1-1986693-9
59.50	63.00	18	1-1986693-8
56.00	59.50	17	1-1986693-7
52.50	56.00	16	1-1986693-6
49.00	52.50	15	1-1986693-5
45.50	49.00	14	1-1986693-4
42.00	45.50	13	1-1986693-3
38.50	42.00	12	1-1986693-2
35.00	38.50	11	1-1986693-1
31.50	35.00	10	1-1986693-0
28.00	31.50	9	1986693-9
24.50	28.00	8	1986693-8
21.00	24.50	7	1986693-7
17.50	21.00	6	1986693-6
14.00	17.50	5	1986693-5
10.50	14.00	4	1986693-4
7.00	10.50	3	1986693-3
3.50	7.00	2	1986693-2

THIS DRAWING IS A CONTROLLED DOCUMENT.

DIMENSIONS: mm

TOLERANCES UNLESS OTHERWISE SPECIFIED:
0 PLC ±-
1 PLC ±0.40
2 PLC ±0.20
3 PLC ±-
4 PLC ±-
ANGLES ±1°

MATERIAL -
FINISH -

DWN KIRAN HOLAL 12JAN2012
CHK MIKE SARVER 12JAN2012
APVD MIKE SARVER 12JAN2012
PRODUCT SPEC -
APPLICATION SPEC -
WEIGHT -

TE Connectivity

NAME
STRAIGHT SPRING TYPE PLUG CONNECTOR,
SIDE STACKABLE LEFT,
02 - 25 POLES, PITCH 3.50mm

SIZE	CAGE CODE	DRAWING NO	RESTRICTED TO
A3	00779	C-1986693	-

CUSTOMER DRAWING

SCALE 2:1 SHEET 1 OF 1 REV A

1470-19 (3/11)

Pro/ENGINEER DRAWING