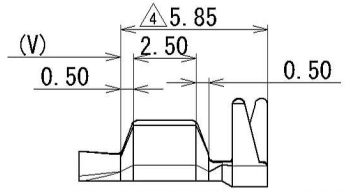

DETAIL OF CONDUCTOR BARREL
(7116-4417-02)
(7116-4417-08)
(7116-4489-08)

TABLE 1

WIRE CRIMP SIZE	PART NO. AND CH. CODE	C	V	W1	W2	H1	H2	APPLICABLE WIRE SIZE (INSULATION DIAMETER: φ0.91～φ1.90)
S	7116-4415-02, C ETC.	3.0	1.9	1.49	2.82	1.82	2.84	(JASO) 0.3 (ISO) 0.22～0.35
M	7116-4416-02, C (7B16-4416-02, C) ETC.	3.0	1.9	1.82	2.94	2.20	3.13	(JASO) 0.5 (ISO) 0.5
L	7116-4417-02, C ETC.	SEE DWG	1.65	1.96	3.10	2.55	3.53	(JASO) 0.85 (ISO) 0.75

TABLE 2

SIZE	PART NO.	PLATING
S	7116-4415-02, C	Sn
	7116-4415-08, C	Au (0.38μm)
	7116-4487-08, C	Au (1.27μm)
M	7116-4416-02, C (7B16-4416-02, C)	Sn
	7116-4416-08, C	Au (0.38μm)
	7116-4488-08, C	Au (1.27μm)
L	7116-4417-02, C	Sn
	7116-4417-08, C	Au (0.38μm)
	7116-4489-08, C	Au (1.27μm)

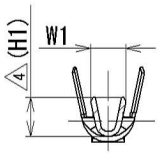

SEC. A-A

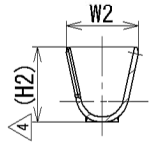

SEC. B-B

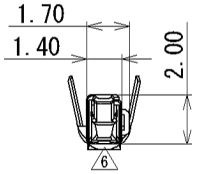

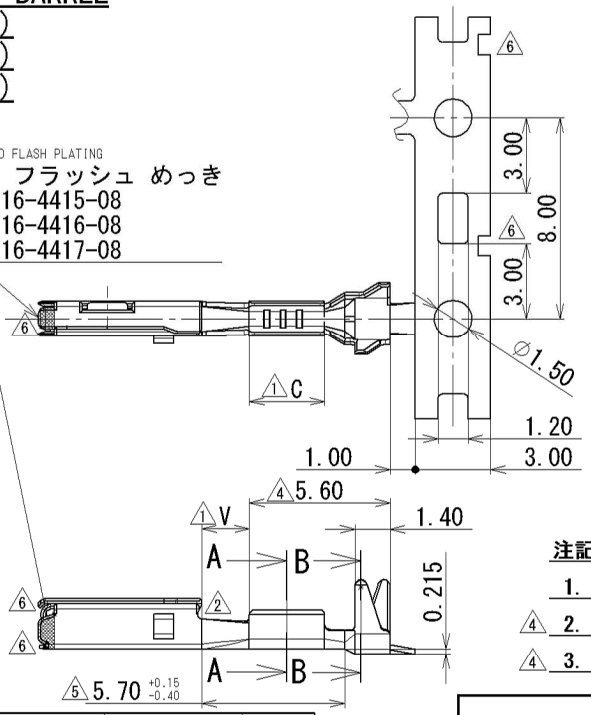

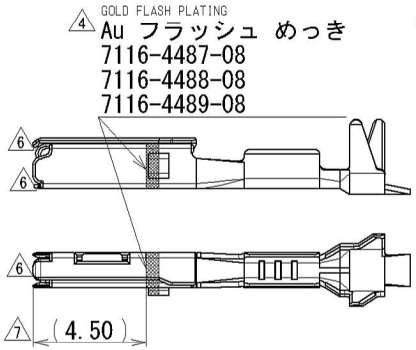

NOTES

1. MALE TERMINAL PART NO. : 7114-4415-02, -4416-02, -4417-02
2. APPLICABLE WIRE SEAL PART NO. : 7158-3165-90, -3166-60, -3167-80, -3168-80, -3182-20
3. PART NUMBERS IN PARENTHESIS SHALL BE USED FOR AIR BAG(A/B) CIRCUITS AND OTHER CIRCUITS DESIGNATED FOR SPECIAL CONTROL.

注記

1. かん合端子品番：7114-4415-02、-4416-02、-4417-02
2. 適用ゴム栓品番：7158-3165-90、-3166-60、-3167-80、-3168-80、-3182-20
3. （ ）内の品番はA/B回路及び特別管理回路に使用すること。

GENERAL TOLERANCE

	10 MAX	50 MAX	100 MAX	250 MAX	250 OVR	R5 MAX	R10 MAX	R20 MAX	R20 OVR	ANGLE	ECCENT
A	±0.15	±0.2	±0.3	±0.5	±0.75	±0.2	±0.3	±0.5	±2.5	±3°	0.1
B	±0.2	±0.3	±0.55	±0.95	±1.4					±3°	0.1
C	±0.3	±0.5	±0.8	±1.4	±2					±3°	0.15

LET	DATE	REVISION RECORD	NO.	CHKD
7	2015/11/25	CHANGED DIMENSION	C15-Z542	S.P
6	2006/03/30	CHANGE FORM, ETC., C	C06-Z314	S.K
5	2004/11/22	ADDED TOLERANCE	C04-ZF29	Y.I
4	2003/12/11	ADDED GOLD PLATING ETC., A	C03-X787	H.Y
3	2002/09/23	ADDED PART NO. ETC.	C02-Y003	H.Y
2	2002/06/05	REVISED FORM, ETC., A	C02-X502	T.Y
1	2001/10/30	CHANGED DIMENSION	C01-Y113	H.Y
	2001/09/04	NEW	C01-X871	H.Y

GENERAL TOLERANCE

	10MAX	50MAX	100MAX	250MAX	250OVR	ANGLE	ECCENT
A	±0.15	±0.2	±0.3	±0.5	±0.75	±30'	0.1
B	±0.2	±0.3	±0.55	±0.95	±1.4	±30'	0.1
C	±0.3	±0.5	±0.8	±1.4	±2	±30'	0.15

SPECIFIED

MASS g

CUSTOMER	
CUSTOMER PART NO.	CUSTOMER DWG NO.
OFFICE	TRIAL PART NO.
VENDOR	
VENDOR NO.	

DWG TYPE	DWG SOURCE	DWG DATE	UNIT	SCL	ANGLE
R	NEW	2001/09/04	mm	5:1	3

APPROVED	CHECKED	CHECKED	DESIGN	DRAWN
T. YAMAWAKI			MURAKAMI YOSHIDA	S. PEREZ
2015/11/25			2001/08/06	2015/11/25

MATL. SPEC. COPPER ALLOY (t=0.2)

TREAT. & FIN. SEE TABLE 2

NAME RH TYPE TERMINAL FEMALE

PART NO. CH. CODE 7116-4415-02 ETC.

DWG NO. 7116-4415-02:R

SET DRW NO.

YAZAKI CORPORATION

ISSUE MARK