Alle Rechte vorbehalten/ *All rights reserved*

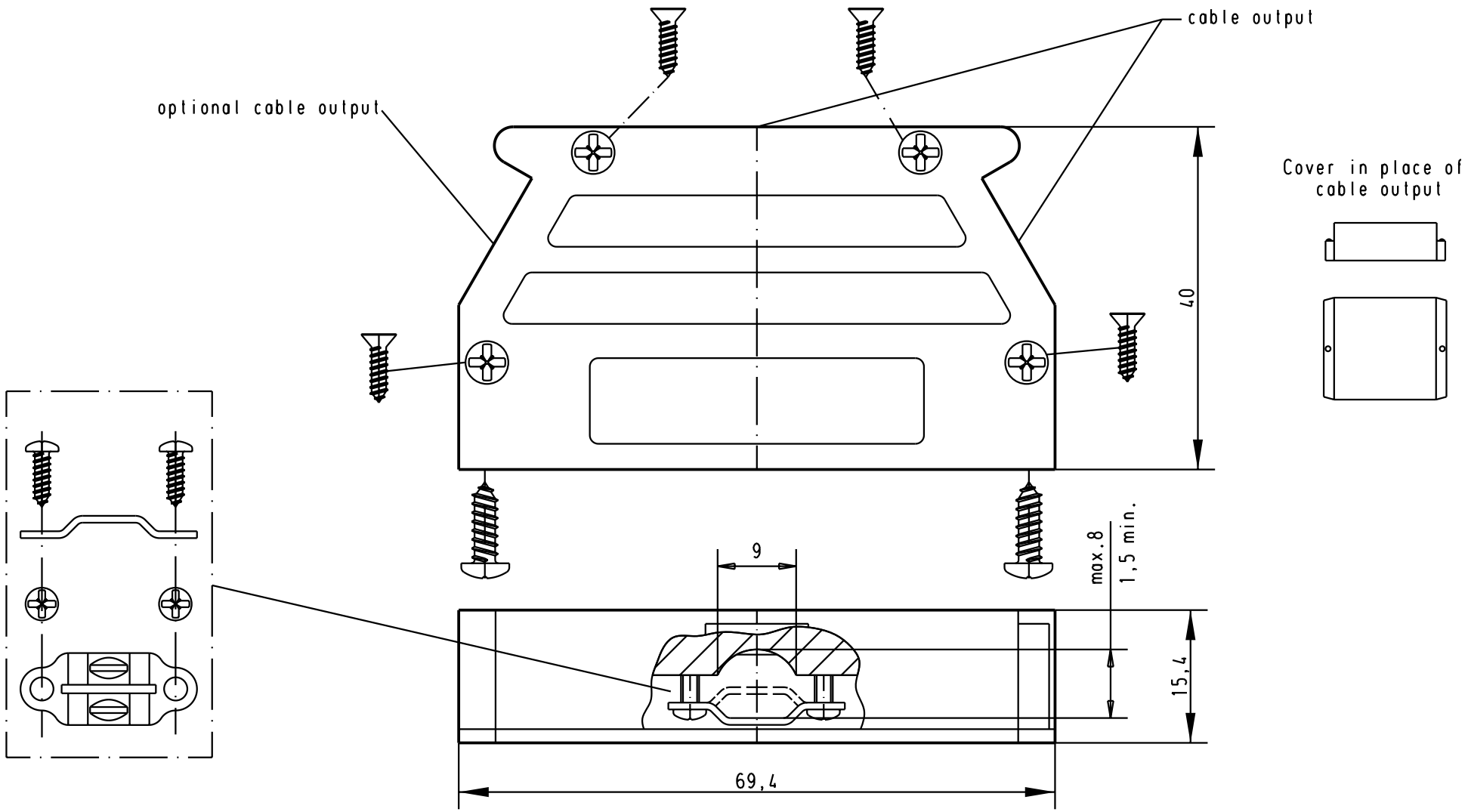


| | | | | |
|---|---|---|---|---|
| 09 67 037 0453 | Thermoplastic metallized | | | |
| 09 67 037 0452 | Thermoplastic black | 29760 | 28-MAR-02 | CV |
| Part number | Material | Mod. | Dat. | Name |

| | Dat. | Name |
|---|---|---|
| Detail. | 28-MAR-02 | CV |
| Insp. | | |
| Stand. | | |

All Dim. in mm
Orig. Size DIN A 4

HARTING EURL
F-95972 Paris

D-Sub, Hood 37 poles
Top and side cable entry

Maßstab/ *Scale* 1.5:1

TB 0967037045x

Sub.

Blatt/ *Page* 1