THIS DRAWING IS UNPUBLISHED. RELEASED FOR PUBLICATION -,- .
© COPYRIGHT - BY TYCO ELECTRONICS CORPORATION. ALL INTERNATIONAL RIGHTS RESERVED.

LOC	DIST
AJ	16

REVISIONS

P	LTR	DESCRIPTION	DATE	DWN	APVD
	G	REV PER ECO 09-000959	21JAN2009	PK	DW

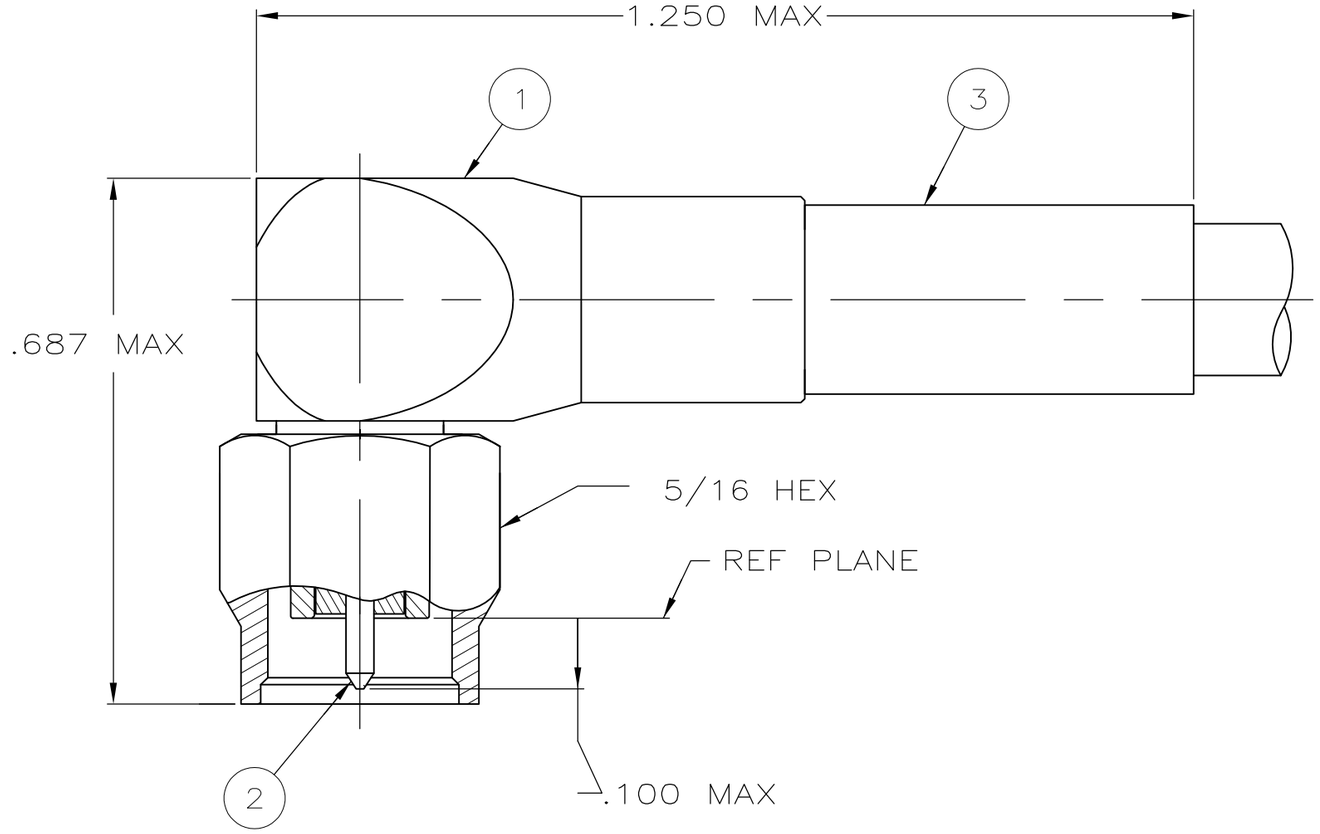

1. FOR USE WITH: RG-142/U,142A/U, & 142B/U CABLE
2. CRIMP WITH TOOL: 220061-1
3. SEE I.S. 2322
4. VSWR 1.15+.02 x F(GHz), DC -8GHZ.

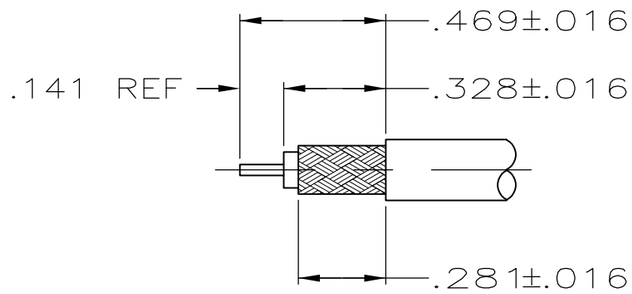

RECOMMENDED STRIP LENGTH
SCALE: 2:1

QTY	PART NUMBER	DESCRIPTION	ITEM
1	225618-3	FERRULE	3
1	225546-1	CONTACT	2
1	225566-1	RTANG PLUG ASSY	1

THIS DRAWING IS A CONTROLLED DOCUMENT.

DIMENSIONS: INCHES

TOLERANCES UNLESS OTHERWISE SPECIFIED:
0 PLC ±-
1 PLC ±-
2 PLC ±-
3 PLC ±-
4 PLC ±-
ANGLES ±-

MATERIAL -
FINISH -

DWN L.A.MOSCOSO 9-29-88
CHK S.J.MAGARO 9-30-88
APVD N.L.GUSTIN 11-21-88
PRODUCT SPEC —
APPLICATION SPEC —
WEIGHT —

Tyco Electronics
Tyco Electronics Corporation
Harrisburg, PA 17105-3608

NAME
RTANG PLUG,
SERIES SMA
—

SIZE	CAGE CODE	DRAWING NO	RESTRICTED TO
A3	00779	C-225609-3	—

CUSTOMER DRAWING
SCALE 5:1 SHEET 1 OF 1 REV G