TABLE 1 SUB ASSEMBLY PART NO. AND CH. CODE	NO.	PART NO. AND CH. CODE	PART NAME	MATERIAL	COLOR	QTY.
△2 SEE TABLE 2	①	△2 SEE TABLE 2	025 16P+060 9P HOUSING MALE	PBT	△2 SEE TABLE 2	1
	②	△2 SEE TABLE 2	025 16P+060 9P SPACER MALE	PBT	△2 SEE TABLE 2	1

△2 TABLE 2	SUB ASSEMBLY PART NO. AND CH. CODE	HOUSING PART NO. AND CH. CODE	SPACER PART NO. AND CH. CODE	COLOR
△5	7286-8860, C	7186-8860	7172-0665	NATURAL
△5	7286-8860-80, C	7186-8860-80	7172-0665-80	BROWN
△5	7286-8860-90, C	7186-8860-90	7172-0665-90	BLUE

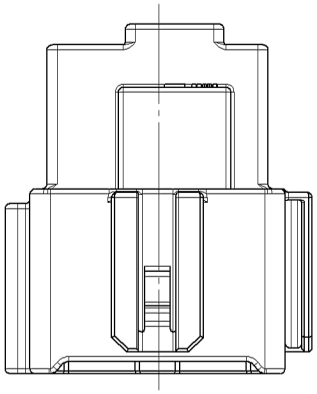

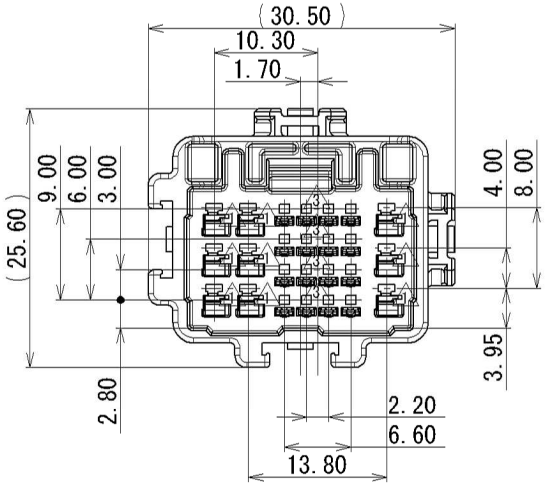

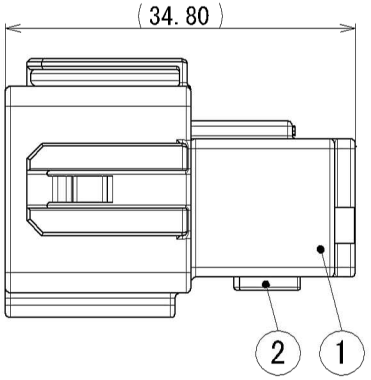

注記

△3 1. かん合相手品番 : 7287-8860 ETC.

2. 適用端子品番 : (025)7114-4993-02 ETC.

: (060)7114-7386-02 ETC.

NOTES

△3 1. MATING PART NO. : 7287-8860 ETC.

2. APPLICABLE TERMINAL PART NO. : (025) 7114-4993-02 ETC.

: (060) 7114-7386-02 ETC.

△5	2013/12/10	CHANGED FORM, C	C13-Z485	S.B
△4	2013/03/25	ADDED COLOR PART NO. ETC.	C13-Z144	M.C
△3	2012/10/30	CHANGED FORM. ETC, B	C12-P285	M.T
△2	2012/08/30	ADDED COLOR PART NO. ETC.	C12-Z779	J.B
△1	2012/01/31	CHANGED FORM, A	C12-Z177	J.B
	2011/11/24	NEW	C11-Z710	J.B
LET	DATE	REVISION RECORD	NO.	CHKD

GENERAL TOLERANCE

	10MAX	50MAX	100MAX	250MAX	2500VR	ANGLE	ECCENT
A	±0.15	±0.2	±0.3	±0.5	±0.75	±30'	0.1
B	±0.2	±0.3	±0.55	±0.95	±1.4	±30'	0.1
C	±0.3	±0.5	±0.8	±1.4	±2	±30'	0.15

SPECIFIED MASS

GENERAL TOLERANCE

	10 MAX	50 MAX	100 MAX	250 MAX	250 OVR	R5 MAX	R10 MAX	R20 MAX	R20 OVR	ANGLE	ECCENT
A	±0.15	±0.2	±0.3	±0.5	±0.75	±0.2	±0.3	±0.5	±2.5	±3°	0.1
B	±0.2	±0.3	±0.55	±0.95	±1.4					±3°	0.1
C	±0.3	±0.5	±0.8	±1.4	±2					±3°	0.15

ISSUE MARK

CUSTOMER			
CUSTOMER PART NO.		CUSTOMER DWG NO.	
OFFICE		TRIAL PART NO.	
VENDOR			
VENDOR NO.			

DWG TYPE	DWG SOURCE	DWG DATE	UNIT	SCL	ANGLE
R	NEW	2011/11/24	mm	2:1	3

APPROVED	CHECKED	CHECKED	DESIGN	DRAWN
H. KANDA	M. NAKAMURA	K. IKEYA	K. MATSUMURA	S. BAYTIC
2013/12/10	2013/12/10	2013/12/10	2011/09/12	2013/12/10

MATL. SPEC. SEE TABLE

TREAT. & FIN.

NAME 025 16P+060 9P HOUSING MALE

SUB ASSEMBLY

PART NO. CH. CODE △2 7286-8860 ETC.

DWG NO. 7286-8860:R

SET DWG NO.

YAZAKI CORPORATION