| RUBBER PART GENERAL TOLERANCE | | | |
|---|---|---|---|
| PART DIM. | 1 | 2 | ③ |
| 0 TO 3 | ± 0.2 | ± 0.3 | ± 0.4 |
| 3 TO 6 | ± 0.2 | ± 0.4 | ± 0.5 |
| 6 TO 10 | ± 0.3 | ± 0.5 | ± 0.6 |
| 10 TO 18 | ± 0.3 | ± 0.6 | ± 0.8 |
| 18 TO 30 | ± 0.4 | ± 0.8 | ± 1.0 |
| 30 TO 50 | ± 0.5 | ± 1.0 | ± 1.5 |
| 50 TO 80 | ± 0.6 | ± 1.2 | ± 2.0 |
| 80 TO 120 | ± 0.7 | ± 1.4 | ± 2.5 |
| 120 TO 180 | ± 0.8 | ± 1.6 | ± 3.0 |
| 180 TO 250 | ± 1.0 | ± 2.0 | ± 4.0 |
| 250 TO 315 | ± 1.2 | ± 2.5 | ± 5.0 |
| 315 TO 400 | ± 1.5 | ± 3.0 | ± 6.0 |
| 400 TO 500 | ± 1.8 | ± 3.5 | ± 7.0 |
| 500 OVER | ± 0.4 % | ± 0.8 % | ± 1.5 % |

| SEAL RUBBER PART NO. | COLOR | APPLICABLE WIRE SIZE |
|---|---|---|
| 7157-3570 | BLACK | (AVS) (AVS) AV 0.5 ~ AV 1.25 |
| 7157-3571-80 | BROWN | (AVS) AV 2 ~ AV 3 |

注記

1) 適用ターミナル品番：7114-2873 ETC.
:7116-2873 ETC.

2) 適用ハウジング品番：7122-6224-40, 7223-6224-40 ETC.

NOTES

1) APPLICABLE TERMINAL PART NO:7114-2873 ETC.
:7116-2873 ETC.

2) APPLICABLE HOUSING NO. :7122-6224-40, 7223-6224-40 ETC.

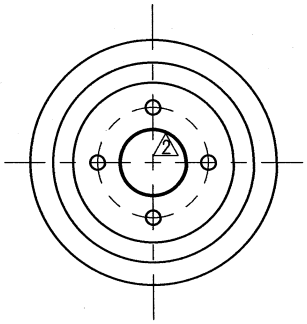

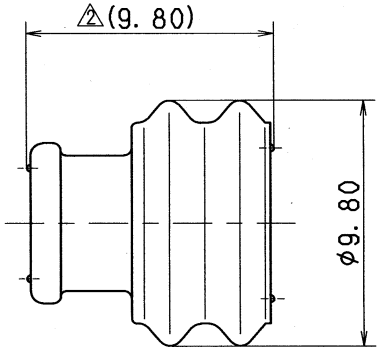


ISSUE MARK

| LET | DATE | REVISION RECORD | NO. | CHKD |
|---|---|---|---|---|
| 2 | 05/02/09 | CHANGED TOLERANCE ETC. | C05-Z201 | K. I |
| 1 | 90/07/20 | RENEW | C90-6847 | A. H |

| GENERAL TOLERANCE | 10MAX | 50MAX | 100MAX | 250MAX | 2500VR | ANGLE | ECCENT |
|---|---|---|---|---|---|---|---|
| A | ±0.15 | ±0.2 | ±0.3 | ±0.5 | ±0.75 | ±30′ | 0.1 |
| B | ±0.2 | ±0.3 | ±0.55 | ±0.95 | ±1.4 | ±30′ | 0.1 |
| C | ±0.3 | ±0.5 | ±0.8 | ±1.4 | ±2 | ±30′ | 0.15 |

SPECIFIED

MASS g

CUSTOMER
CUSTOMER PART NO. | CUSTOMER DWG NO.
OFFICE | TRIAL PART NO.
VENDOR
VENDOR NO.

| DWG TYPE | DWG SOURCE | DWG DATE | UNIT | SCL | ANGLE |
|---|---|---|---|---|---|
| R | RENEW | 90/07/02 | mm | 5:1 | 3 |

| APPROVED | CHECKED | CHECKED | DESIGN | DRAWN |
|---|---|---|---|---|
| 移山 | 笹木 | 池谷 | ISHIZUKA | D. GABRIEL ROMEL GALIZA |
| '05.02.14 | '05.02.14 | '05.02.14 | 83/01/06 | 05/02/09 |

MATL. SPEC. SILICONE RUBBER | TREAT. & FIN.

NAME X-TYPE CONNECTOR
SEAL RUBBER

PART NO. / CH. CODE 7157-3570 ETC.

DWG NO. 7157-3570:R | SET DRW NO.

YAZAKI CORPORATION