© 2019 TE Connectivity. All Rights Reserved.

REVISIONS					
P	LTR	DESCRIPTION	DATE	DWN	APVD
	A	ECO-21-006862	16JUN2020	NR	MV

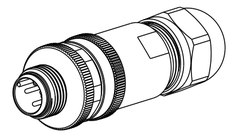

SCALE 1:1

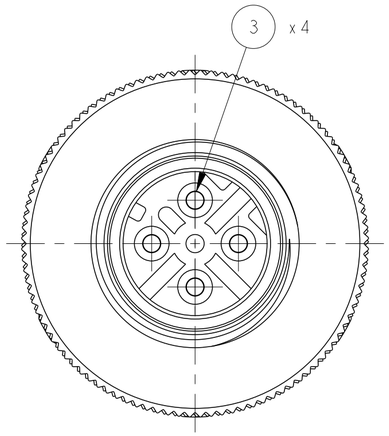

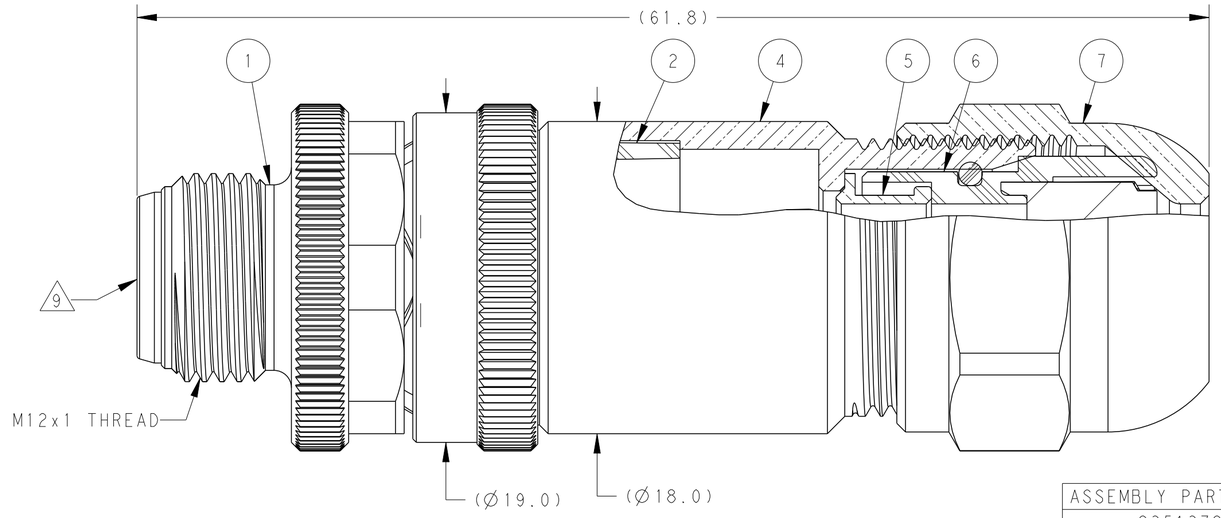

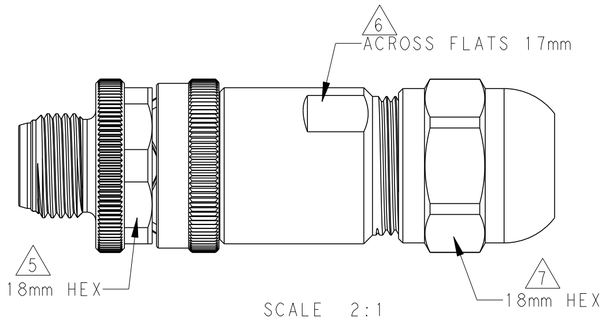

SCALE 2:1

ASSEMBLY PART NUMBER	CONTACT SIZE	SEAL	CABLE FEED
2351378-1	22-26 AWG	PG7	4-6mm
2351378-2	22-26 AWG	PG9	6-8.4mm
2351378-3	18-20 AWG	PG7	4-6mm
2351378-4	18-20 AWG	PG9	6-8.4mm

TECHNICAL DATA	M12 MALE, D4 CODE
RATED VOLTAGE	250V
RATED CURRENT	4A
POLLUTION DEGREE	3
OVERVOLTAGE CATEGORY	II
MATERIAL GROUP	II
CONTACT RESISTANCE	≤8mΩ
INSULATION RESISTANCE	>100MΩ
DEGREE OF PROTECTION	IP67
OPERATION TEMPERATURE	-40~85°C

NOTES;

1. ( ): DIMENSIONS FOR INFORMATION
   ▭: INSPECTION DIMENSIONS.
2. FRAMED DIMENSIONS ARE TO BE STRICTLY ADHERED TO.
3. TECHNICAL DATA: SEE TABLE
4. THE M12 CONNECTOR ASSEMBLY MUST MEET IP67 SEALING REQUIREMENT AT MATED CONDITION.
5. TIGHTENING TORQUE FOR MATING FEMALE CONNECTOR - 0.6NM.
6. TIGHTENING TORQUE - 1NM.
7. TIGHTENING TORQUE - 1NM.
8. PACKAGING: 1 PIECE IN A BAG
9. INTERFACE DIMENSIONS PER IEC 61076-2-101.
10. CABLE WIRE SIZE RANGE AWG 18-26.
11. THIS CONNECTOR IS COMPLIANT TO FIRE AND SMOKE STANDARD EN45545-2 AND SHOCK & VIBRATION STANDARD EN61373.
12. CONTACT CRIMPING TOOL: 601966-1 (M22520/2-01)
    POSITIONER: 2392543-1
    SELECTOR NUMBER: 6 (FOR AWG 22-26)
    7 (FOR AWG 18-20)
13. CONTACT PART NUMBER: 2351768-1 (22-26 AWG)
    2351768-2 (18-20 AWG)
14. THE CABLE IMPEDANCE SHOULD BE IN THE RANGE OF 95 - 100 Ω.
15. STRICTLY FOLLOW THE RECOMMENDED CABLE STRIPPING DIMENSIONS.

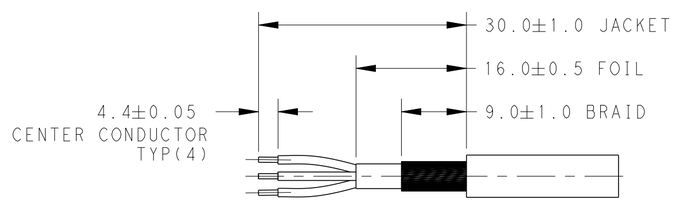

RECOMMENDED CABLE STRIPPING DIMENSION

ITEM NO.	DESCRIPTION	QTY	MATERIAL	PLATING
7	PRESS SCREW	1	BRASS	NICKEL
6	PINCH RING SUB ASSEMBLY	1	-	-
5	SHIELDING RING	1	BRASS	NICKEL
4	METAL BODY	1	BRASS	NICKEL
3	MALE CONTACT	4	PHOSPHOR BRONZE	GOLD
2	CONTACT POSITIONER	1	POLYAMIDE	BLACK
1	M12 MALE, SUB ASSEMBLY	1	-	-

THIS DRAWING IS A CONTROLLED DOCUMENT.

DIMENSIONS: mm

TOLERANCES UNLESS OTHERWISE SPECIFIED:
0 PLC ±
1 PLC ±-
2 PLC ±-
3 PLC ±-
4 PLC ±-
ANGLES ±-

MATERIAL: SEE BOM TABLE -

FINISH: - finish_spec_2

DWN RAJAGOPAL N 28OCT2019
CHK M.BONNIN 28OCT2019
APVD M.VIMARD 28OCT2019
PRODUCT SPEC 108-157015
APPLICATION SPEC 114-157020
WEIGHT -

TE Connectivity

NAME: M12 MALE STRAIGHT SHIELDED CONNECTOR D4 CODE, CRIMP TYPE, IP 67 -

SIZE	CAGE CODE	DRAWING NO	RESTRICTED TO
A2	00779	C-2351378	

CUSTOMER DRAWING | SCALE 5:1 | SHEET 1 OF 1 | REV A