MARK	YAZAKI PART NO	MATERIAL	COLOR
M01MW	7122-6010	NYLON	NUTURAL
M01MW-GY	7122-6010-40	NYLON	GRAY

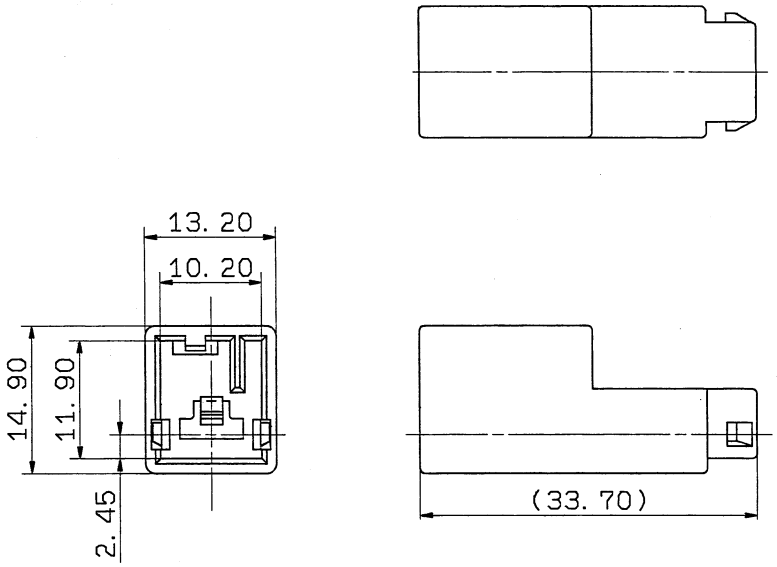

注記

1. 適用端子品番：7114-2870~7114-2872
2. 適用リヤホルダ品番：7157-6210-30 ⚠1
3. 嵌合相手品名：7123-6010

⚠2 NOTES

1. APPLICABLE TERMINAL NO. :7114-2870~7114-2872
2. APPLICABLE REAR HOLDER NO. :7157-6210-30
3. MATING PART NO. :7123-6010

ISSUE MARK

LET	DATE	REVISION RECORD	NO.	CHKD
⚠2	89. 07. 06	CHANGED DRAWING&RENEW	C89-L728	S. Y
⚠1	85. 10. 09	ADDED PART No., CHANGED NOTE	C85-1243	湯 山
	83. 08. 29	N E W	C83-1288	S. I

GENERAL TOLERANCE

	10MAX	50MAX	100MAX	250MAX	2500VR	ANGLE	ECCENT
A	±0. 15	±0. 2	±0. 3	±0. 5	±0. 75	±30'	0. 1
B	±0. 2	±0. 3	±0. 55	±0. 95	±1. 4	±30'	0. 1
©	±0. 3	±0. 5	±0. 8	±1. 4	±2	±30'	0. 15

SPECIFIED

WEIGHT g

CUSTOMER

CUSTOMER PART NO. | CUSTOMER DWG NO.

OFFICE | STDLIB NO.

VENDOR

VENDOR NO.

DWG TYPE	DWG SOURCE	DWG DATE	UNIT	SCL	ANGLE
R	NEW	83. 08. 04	mm	2/1	3

APPROVED	CHECKED	CHECKED	DESIGN	DRAWN
T. Ende		H. Sakai	SAKAI	S. YAGI
89.07.06		89.07.06	82.02.03	89.07.06

MATL. SEE TABLE | TREAT. & FIN.

SPEC.

NAME ⚠2 M TYPE CONNECTOR HOUSING 1PM(W)

PART NO. 7122-6010 ETC. ⚠1

DWG NO. ⚠2 7122-6010:R | TRIAL PART NO.

YAZAKI CORPORATION