③ YAZAKI PART NO. AND CH. CODE	COLOR
② 7123-7564	NATURAL
7123-7564-30	BLACK
7123-7564-40	GRAY

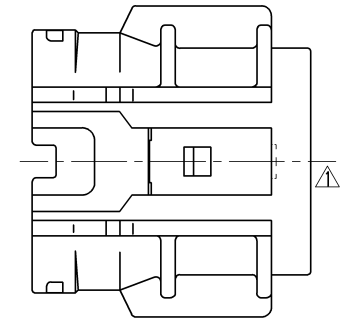

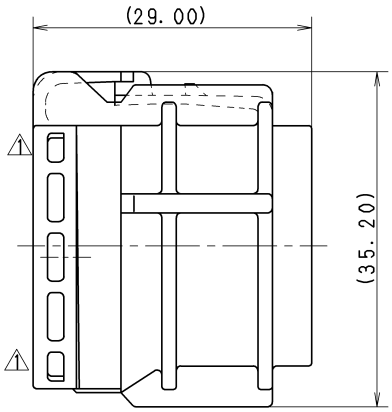

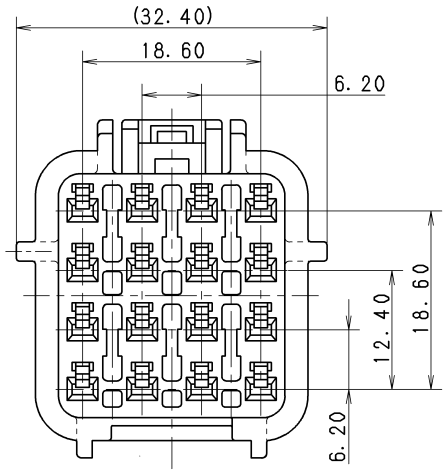

③ 注記

1. かん合相手品番 : 7222-7564,
7222-7564-30,
7222-7564-40

③ NOTE

1. MATING PART NO. : 7222-7564,
7222-7564-30,
7222-7564-40

LET	DATE	REVISION RECORD	NO.	CHKD
④	10.11.15	CHANGED PART NAME	C10-ZA99	R.B
③	09.06.15	DELETED VIEWS, ETC.	C09-Z446	T.K
②	91.07.12	ADDED PART NO.	C91-L555	T.T
①	90.10.10	CHANGED FORM	C90-M057	K.S
	88.02.16	NEW	8MC-0231	S.K

③GENERAL TOLERANCE

	10MAX	50MAX	100MAX	250MAX	2500VR	ANGLE	ECCENT
A	±0.15	±0.2	±0.3	±0.5	±0.75	±30′	0.1
B	±0.2	±0.3	±0.55	±0.95	±1.4	±30′	0.1
Ⓒ	±0.3	±0.5	±0.8	±1.4	±2	±30′	0.15

SPECIFIED

MASS

CUSTOMER

CUSTOMER PART NO. | CUSTOMER DWG NO.

OFFICE | TRIAL PART NO.

VENDOR

VENDOR NO.

DWG TYPE	DWG SOURCE	DWG DATE	UNIT	SCL	ANGLE
R	NEW	88.02.16	mm	③ 2:1	3

APPROVED	CHECKED	CHECKED	DESIGN	DRAWN
S. MIZUSE	———	R. CABANGAL	S. KODAMA	R. BUDIAO
10.11.15	———	10.11.15	88.01.14	10.11.15

MATL. SPEC. ③PBT

TREAT. & FIN.

NAME ④ SWP-TYPE HOUSING 16P FEMALE

PART NO. / CH. CODE 7123-7564 ETC.

DWG NO. ②7123-7564:R

SET DWG NO.

YAZAKI CORPORATION

ISSUE MARK