MARK	PART NO.	COLOR
M04FW	7123-6040	NATURAL
M04FW-GY	7123-6040-40	GRAY

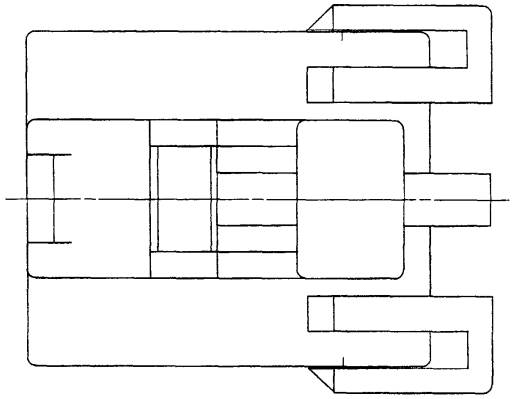

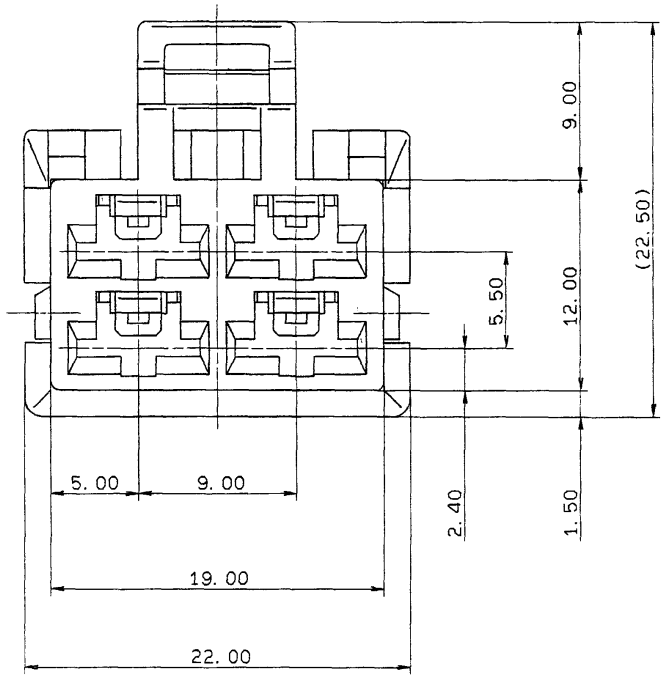

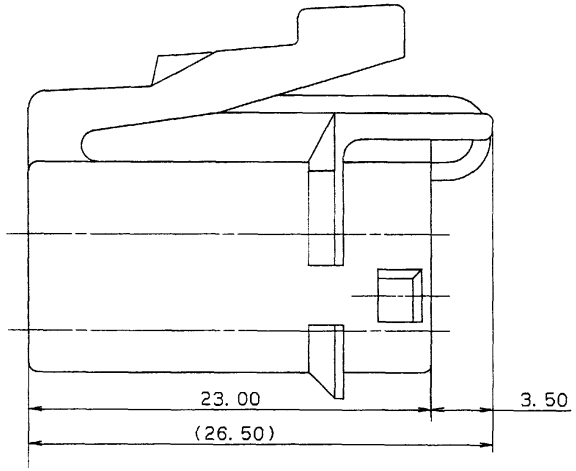

注 記

1) 嵌合相手品番：7122-6040, 7122-6040-40
2) 適用端子品番：7116-2870, 7116-2871, 7116-2872
3) 適用リヤホルダ品番：7157-6240-30

NOTES

1) MATING PART NO. :7122-6040, 7122-6040-40
2) APPLICABLE TERMINAL NO. :7116-2870, 7116-2871, 7116-2872
3) APPLICABLE REAR HOLDER NO. :7157-6240-30

ISSUE MARK

LET	DATE	REVISION RECORD	NO.	CHKD
	88.12.08	N E W	8MC-3157	T.M

GENERAL TOLERANCE							
	10MAX	50MAX	100MAX	250MAX	2500VR	ANGLE	ECCENT
A	±0.15	±0.2	±0.3	±0.5	±0.75	±30'	0.1
B	±0.2	±0.3	±0.55	±0.95	±1.4	±30'	0.1
C	±0.3	±0.5	±0.8	±1.4	±2	±30'	0.15
SPECIFIED						WEIGHT	g

CUSTOMER	
CUSTOMER PART NO.	CUSTOMER DWG NO.
OFFICE	STDLIB NO.
VENDOR	
VENDOR NO.	

DWG TYPE	DWG SOURCE	DWG DATE	UNIT	SCL	ANGLE
R	NEW	88.10.13	mm	5/1	3

APPROVED	CHECKED	CHECKED	DESIGN	DRAWN
K.Sato 88.12.12		T.Maejima 88.12.09	SAKAI 82.08.03	S.YAGI 88.10.13

MATL. SPEC.	NYLON	TREAT. & FIN.
NAME	M TYPE CONNECTOR HOUSING 4PF(W)	
PART NO.	7123-6040 ETC.	
DWG NO.	7123-6040 : R	TRIAL PART NO.

YAZAKI CORPORATION