© – TE Connectivity. All Rights Reserved.

REVISIONS					
P	LTR	DESCRIPTION	DATE	DWN	APVD
	P1	REVISED PER ECN-21-122181	18OCT2021	RZ	WK

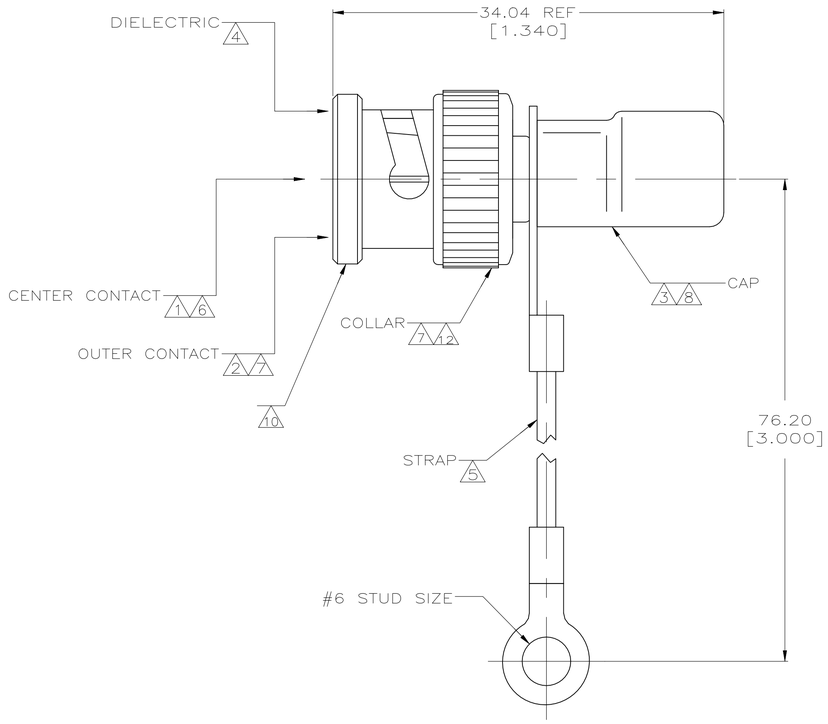

VIEW A

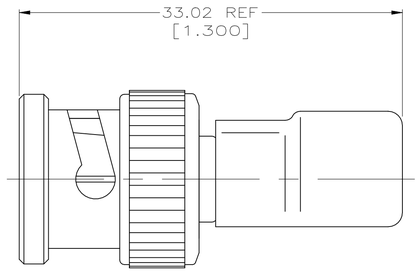

VIEW B

SAME AS VIEW A EXCEPT AS SHOWN

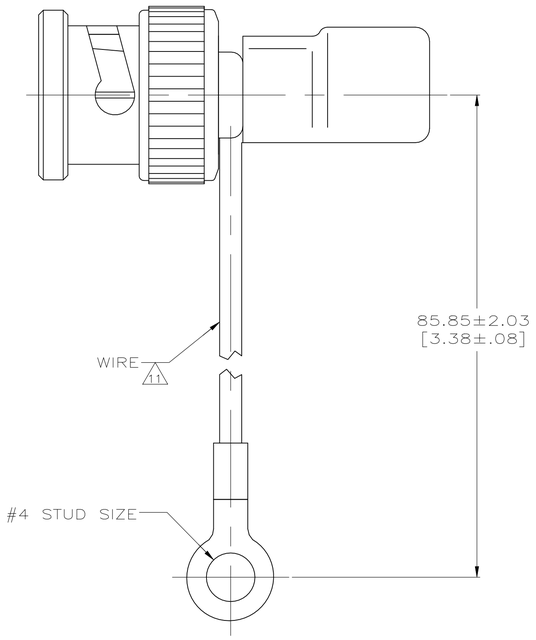

VIEW C

SAME AS VIEW A EXCEPT AS SHOWN

1. BRASS PER ASTM B 16.
2. BRASS PER ASTM B 36.
3. COPPER PER ASTM B 152.
4. POLYETHYLENE PER LP-390.
5. POLYESTER PER MIL-T-43435, COLOR NATURAL.
6. GOLD PLATE PER ASTM B 488, 0.76 µm [.000030] MINIMUM THICK.
7. NICKEL PLATE PER QQ-N-290, 1.27 µm [.000050] MINIMUM THICK.
8. TIN PLATE PER ASTM B 545, 2.54 µm [.000100] MINIMUM THICK.
9. TIN PLATE PER ASTM B 545, 3.81 µm [.000150] MINIMUM THICK.
10. VALUE MARKED ON CONNECTOR BODY AS SHOWN (SEE TABLE).
11. 16 GAUGE INSULATED GROUND WIRE.
12. ZINC PER ASTM B 86.

WATT	TOLERANCE	OHM	MARKING 10	VIEW	PART NUMBER
1	1%	50	50Ω 1W	C	1-5221629-6
1	1%	50	50Ω 1W	B	5221629-9
1	1%	93	93Ω 1W	B	5221629-6
1	1%	75	75Ω 1W	B	5221629-5
1	1%	50	50Ω 1W	B	5221629-4
1	1%	75	75Ω 1W	A	5221629-2
1	1%	50	50Ω 1W	A	5221629-1

RESISTOR SPECIFICATIONS

THIS DRAWING IS A CONTROLLED DOCUMENT.

DIMENSIONS: mm [INCHES]

TOLERANCES UNLESS OTHERWISE SPECIFIED:
0 PLC ± –
1 PLC ± –
2 PLC ± 3.18 [.125]
3 PLC ± –
4 PLC ± –
ANGLES ± –

MATERIAL –
FINISH –

DWN J. HAVENER 13DEC2005
CHK J. LIPPERT 13DEC2005
APVD J. LIPPERT 13DEC2005
PRODUCT SPEC —
APPLICATION SPEC —
WEIGHT 0.000000
CUSTOMER DRAWING

TE Connectivity

NAME TERMINATOR, PLUG, COMMERCIAL BNC

SIZE	CAGE CODE	DRAWING NO	RESTRICTED TO
A1	00779	C-5221629	—

SCALE 4:1 SHEET 1 OF 1 REV P1

4805 (1/15)