THIS DRAWING IS UNPUBLISHED. RELEASED FOR PUBLICATION -,- .
© COPYRIGHT - By - ALL RIGHTS RESERVED.

LOC	DIST
G	14

REVISIONS

P	LTR	DESCRIPTION	DATE	DWN	APVD
	C1	REVISED PER ECO-12-006198	30MAR12	KH	DR

△1 COPPER PER ASTM B-152, ANNEALED

△2 TIN PLATE PER ASTM B-545

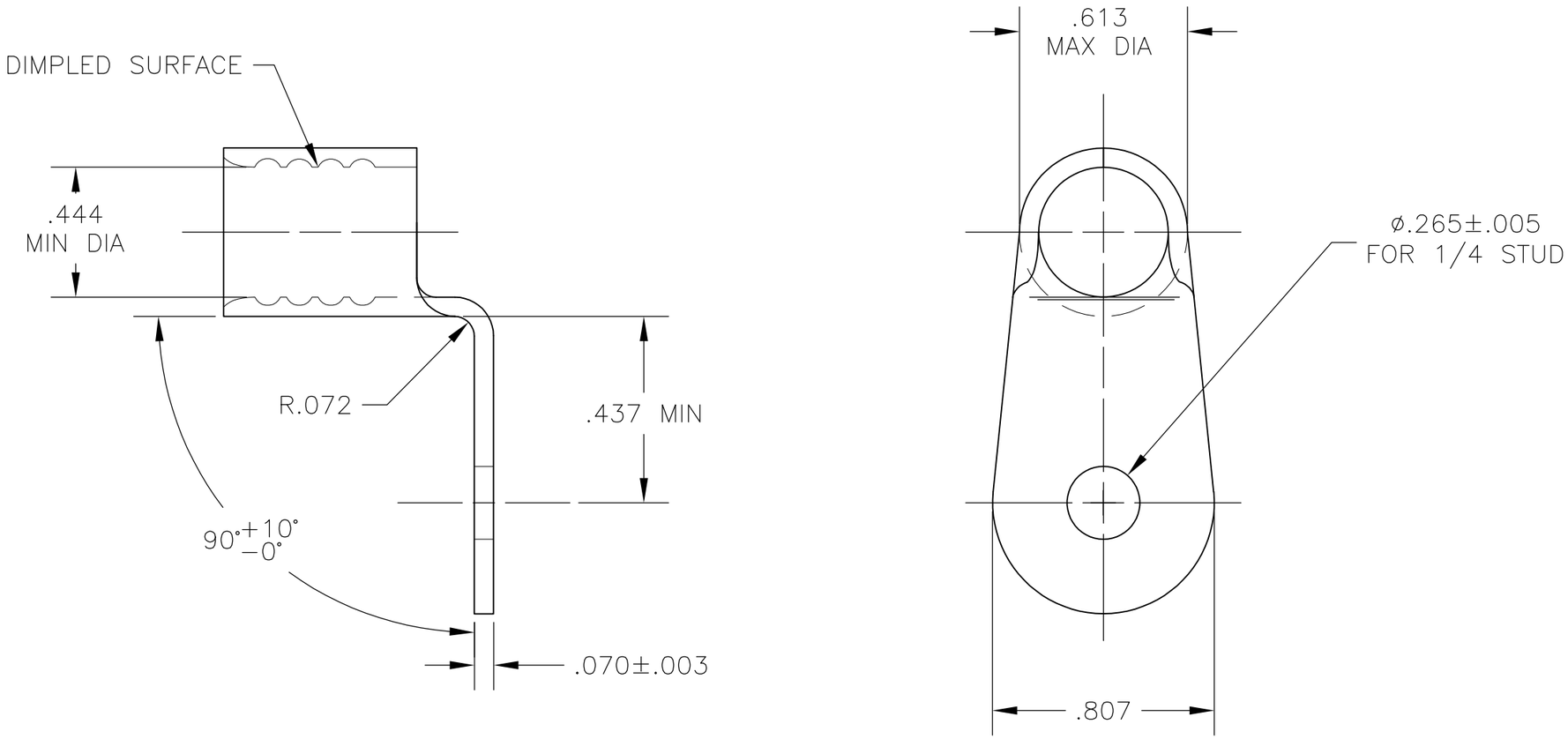

322905

PART NO

THIS DRAWING IS A CONTROLLED DOCUMENT.

DIMENSIONS: INCHES

TOLERANCES UNLESS OTHERWISE SPECIFIED:

0 PLC	± -
1 PLC	± -
2 PLC	± -
3 PLC	± .008
4 PLC	± -
ANGLES	± 5°

MATERIAL - △1

FINISH - △2

DWN	jr ruth	07MAY04
CHK	MJ SPICER	07MAY04
APVD	MJ SPICER	07MAY04
PRODUCT SPEC	—	
APPLICATION SPEC	—	
WEIGHT	—	

TE Connectivity

NAME

WIRE TERMINAL
SOLISTRAND, RING TONGUE, BENT 90
WIRE SIZ 1/0

SIZE	CAGE CODE	DRAWING NO	RESTRICTED TO
A3	00779	C-322905	—

CUSTOMER DRAWING

SCALE	SHEET	REV
2:1	1 OF 1	C1

1470-19 (3/11)