VICOR CONFIDENTIAL
THIS DOCUMENT AND THE DATA DISCLOSED HEREIN OR HEREWITH IS NOT TO BE REPRODUCED, USED OR DISCLOSED IN WHOLE OR IN PART TO ANYONE WITHOUT THE PERMISSION OF VICOR CORP.

REV.	DESCRIPTION	INTL	DATE	APVD
1	RELEASE PER E200376	DKT	07/28/20	VD

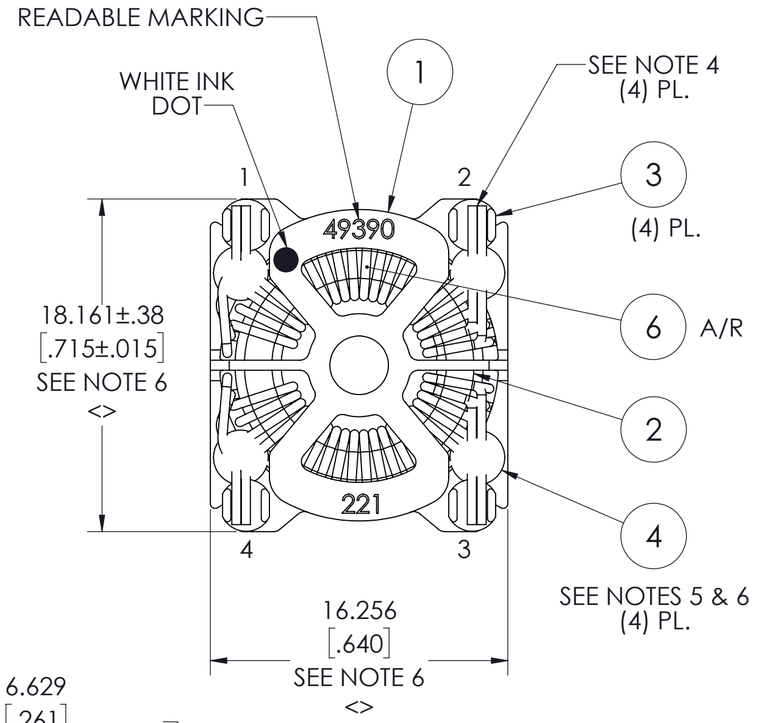

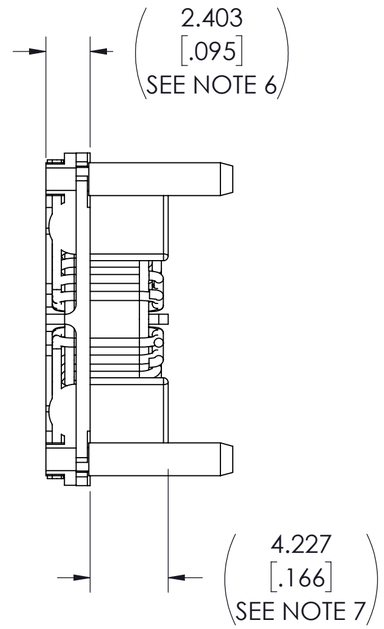

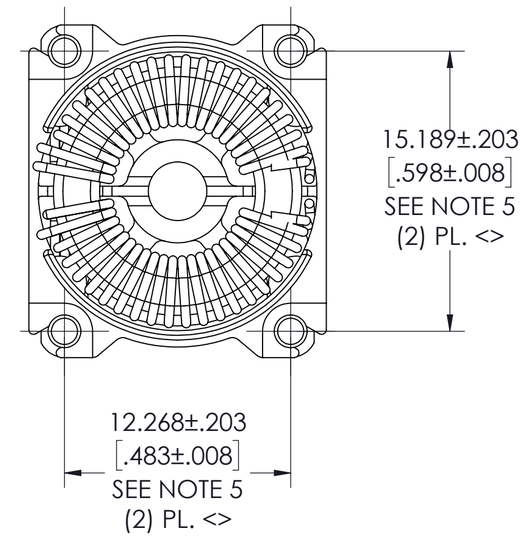

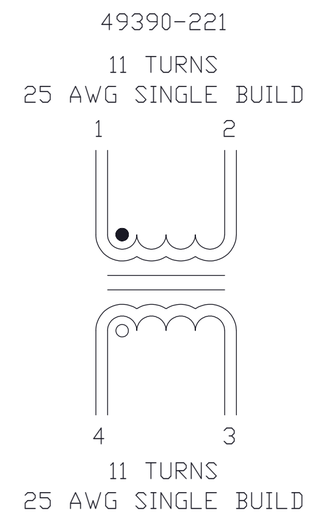

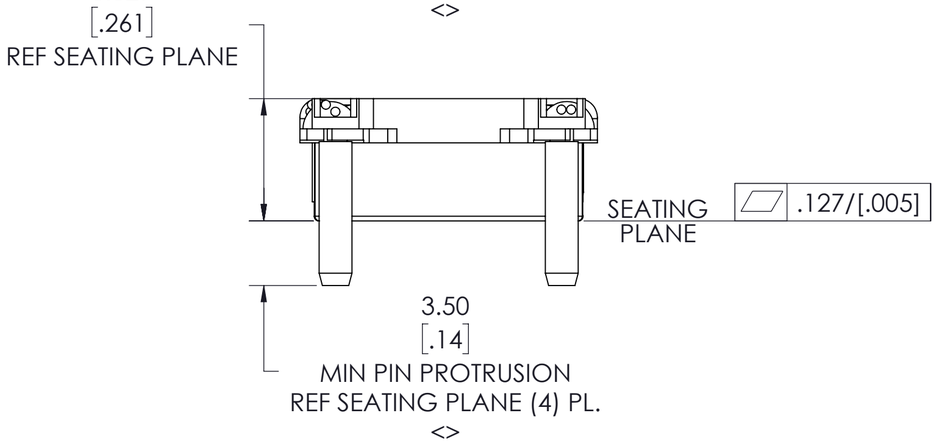

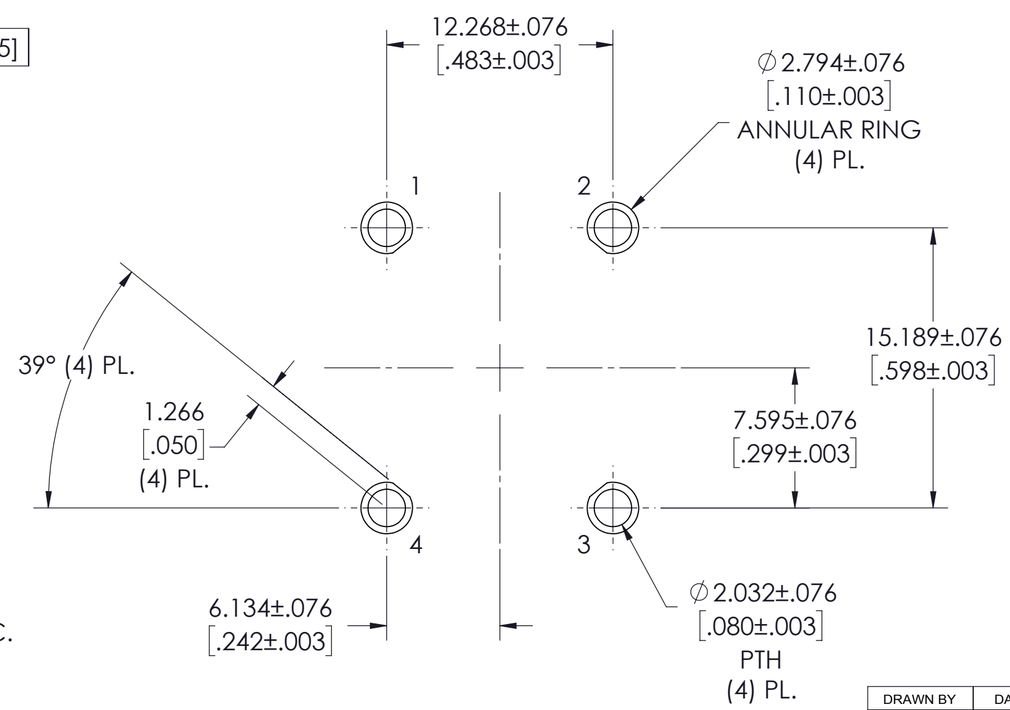

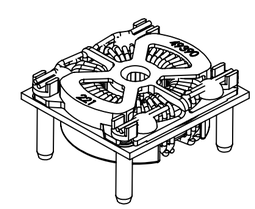

VICOR P/N	IND @ 10KHz 50mV	Z @ 1MHz 50mV	DCR MAX PER WINDING	RATED I
49390-221	220µH ±25%	700 Ω MIN	11 mΩ	10.5 A

NOTES:
1- SEE BOM 49390-221 FOR LIST OF PARTS.
<> 2- WIRE TO BE SINGLE BUILD, UL R/C (OBMW2) MW77C, CLASS H, 180° C.
<> 3- WIND SINGLE LAYER. NO BACK TRACKING ALLOWED.
<> 4- STRIP AND SOLDER WIRES TO TERMINAL WITH Sn95/Sb5 SOLDER.
<> 5- DISPENSE EPOXY (ITEM 4) APPROX WHERE SHOWN, ENSURE THE WIRE AND PINS ARE SECURED TO THE HEADER WITH EPOXY. MEASURE PIN POSITION WHERE PIN COMES THROUGH PLASTIC FLANGE, NOT AT PIN TIP.
<> 6- SOLDER, WIRES AND EPOXY SHALL NOT VIOLATE OVERALL DIMENSIONS SHOWN.
<> 7- WINDINGS SHALL NOT VIOLATE DIMENSION SHOWN.
8- <> DENOTES CRITICAL CHARACTERISTIC FOR LOT INSPECTION.
9- RoHS COMPLIANT. LEAD FREE PER CST-0001, LATEST REVISION.

DRAWN BY	DATE
James Bourque	7/17/2018

UNLESS OTHERWISE SPECIFIED DIMENSIONS ARE MM /[INCH]
TOLERANCES ARE:
DECIMALS X.XX [X.XX] = ±0.25 [0.01] ANGLES ±1°
X.XXX [X.XXX] = ±0.127 [0.005]
THIRD ANGLE PROJECTION
DO NOT SCALE DRAWING

VICOR SWD

TH INDUCTOR BIFILAR COMMON MODE ADAPTER

SIZE	CAGE CODE	DWG NO	REV
C	67131	49389	1

SCALE 4:1 SHEET 1 OF 1