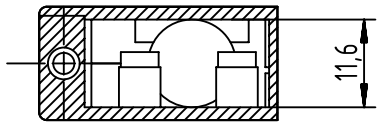

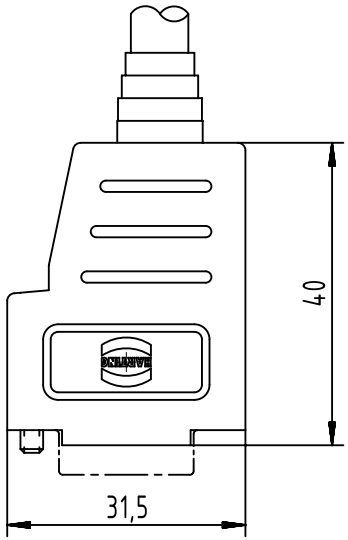

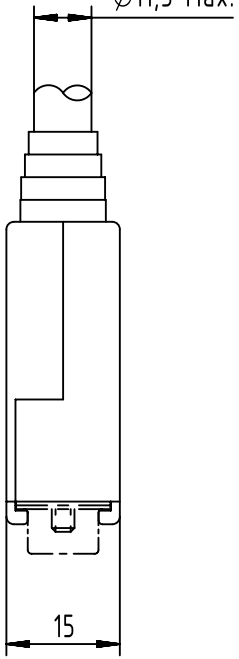

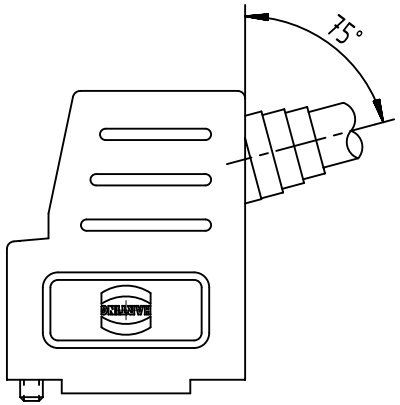

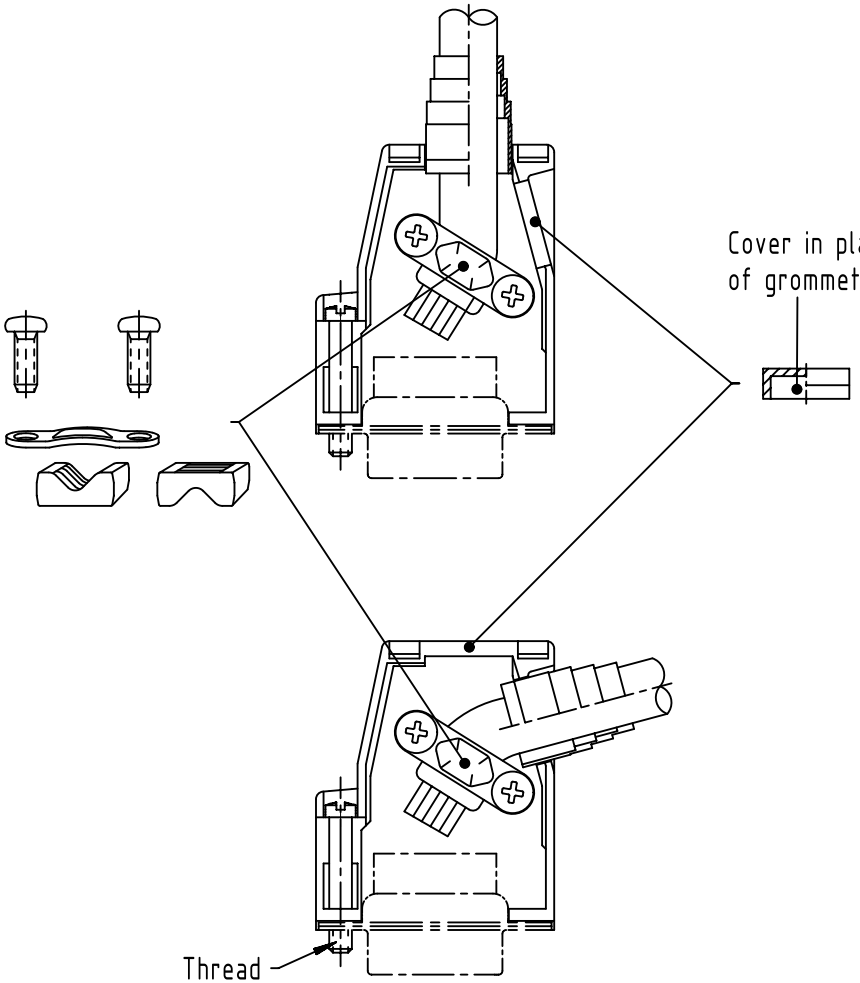

Cable diameters (2:1)

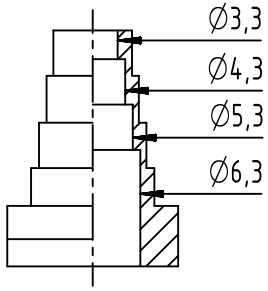

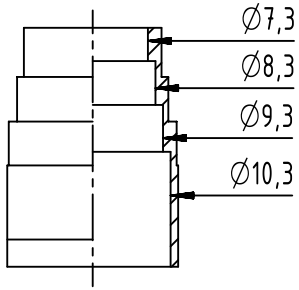

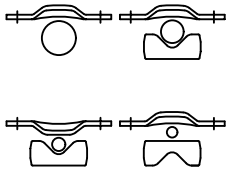

09670090465	4-40 UNC
09670090464	M3
Part number	Thread

All Dimensions in mm
Original Size DIN A4

Scale 1:1

Free size tol.

Ref.

Sub.

All rights reserved

Department EC PD - FR

HARTING Electronics GmbH
D-32339 Espelkamp

Created by	Inspected by	Standardisation	Date	State
DOUGE	BAGDIKIAN	KOHLER	2014-01-08	Final Release

Title: D-Sub 9-poles metallized hood top and side entry

Doc-Key / ECM-Nr.
100561918/UGD/001/A
500000070072

Type: TB

Number: 0967009046X

Rev.: A

Page: 1/1

A4