YAZAKI PART NO. AND CH. CODE	COLOR
7123-7544-30	BLACK
7123-7544-40	GRAY

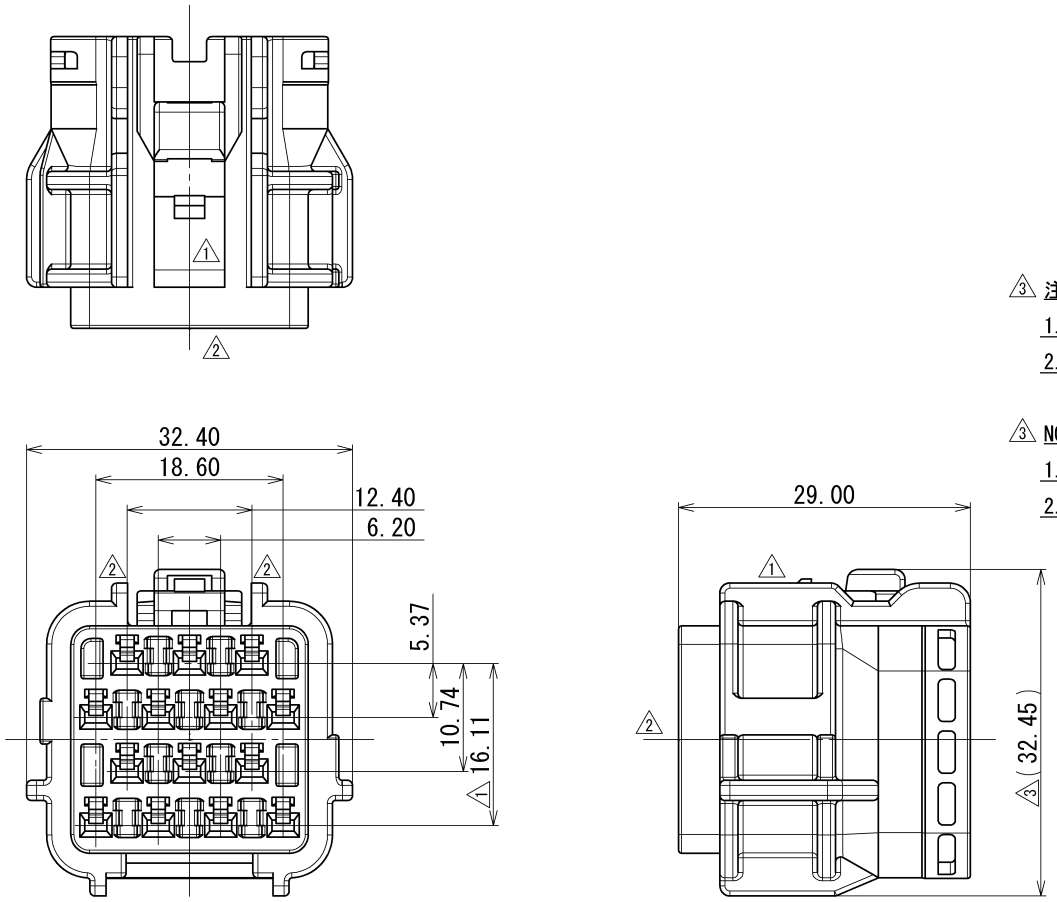

△3 注記

1. かん合相手品番 : 7222-7544-40, 7222-7544-30
2. 適用リアホルダ品番 : 7157-7818-80

△3 NOTES

1. MATING PART NO. : 7222-7544-40, 7222-7544-30
2. APPLICABLE REAR HOLDER PART NO. : 7157-7818-80

ISSUE MARK

LET	DATE	REVISION RECORD	NO.	CHKD
△3	2011/11/28	ADDED GENERAL TOLERANCE ETC.	C11-Z860	G.M
△2	1990/10/10	CHANGED FORM	C90-M057	K.S
△1	1988/01/28	CHANGED FORM	8MC-0162	S.Y
	1987/09/16	NEW	7MC-0523	S.Y

△3 GENERAL TOLERANCE

	10MAX	50MAX	100MAX	250MAX	2500VR	ANGLE	ECCENT
A	±0.15	±0.2	±0.3	±0.5	±0.75	±30'	0.1
B	±0.2	±0.3	±0.55	±0.95	±1.4	±30'	0.1
Ⓒ	±0.3	±0.5	±0.8	±1.4	±2	±30'	0.15

SPECIFIED

MASS

CUSTOMER	
CUSTOMER PART NO.	CUSTOMER DWG NO.
OFFICE	TRIAL PART NO.
VENDOR	
VENDOR NO.	

DWG TYPE	DWG SOURCE	DWG DATE	UNIT	SCL	ANGLE
R	NEW	1987/09/18	mm	2:1	3

APPROVED	CHECKED	CHECKED	DESIGN	DRAWN
H.KONDO	T.KOBAYASHI	———	YAMADA	G.MAGNAYON
2011/11/28	2011/11/28	———	1987/09/16	2011/11/28

MATL. SPEC. △3 PBT(COLOR:SEE TABLE)

TREAT. & FIN.

NAME △3 SWP-TYPE HOUSING 14P F

PART NO. CH. CODE 7123-7544-40 ETC.

DWG NO. 7123-7544-30:R

SET DWG NO.

YAZAKI CORPORATION