THIS DRAWING IS UNPUBLISHED. RELEASED FOR PUBLICATION -,- .
© COPYRIGHT - By - ALL RIGHTS RESERVED.

| LOC | DIST |
|---|---|
| G | 14 |

REVISIONS

| P | LTR | DESCRIPTION | DATE | DWN | APVD |
|---|---|---|---|---|---|
| | S1 | REVISED PER ECO-11-004917 | 11MAR11 | RK | HMR |

| AMP WIRE RANGE | Listed FILE E13288 | LR7189 Certified |
|---|---|---|
| 12-10 AWG SOLID OR STRANDED | 12 AWG STRANDED | 12-10 AWG SOLID OR STRANDED |

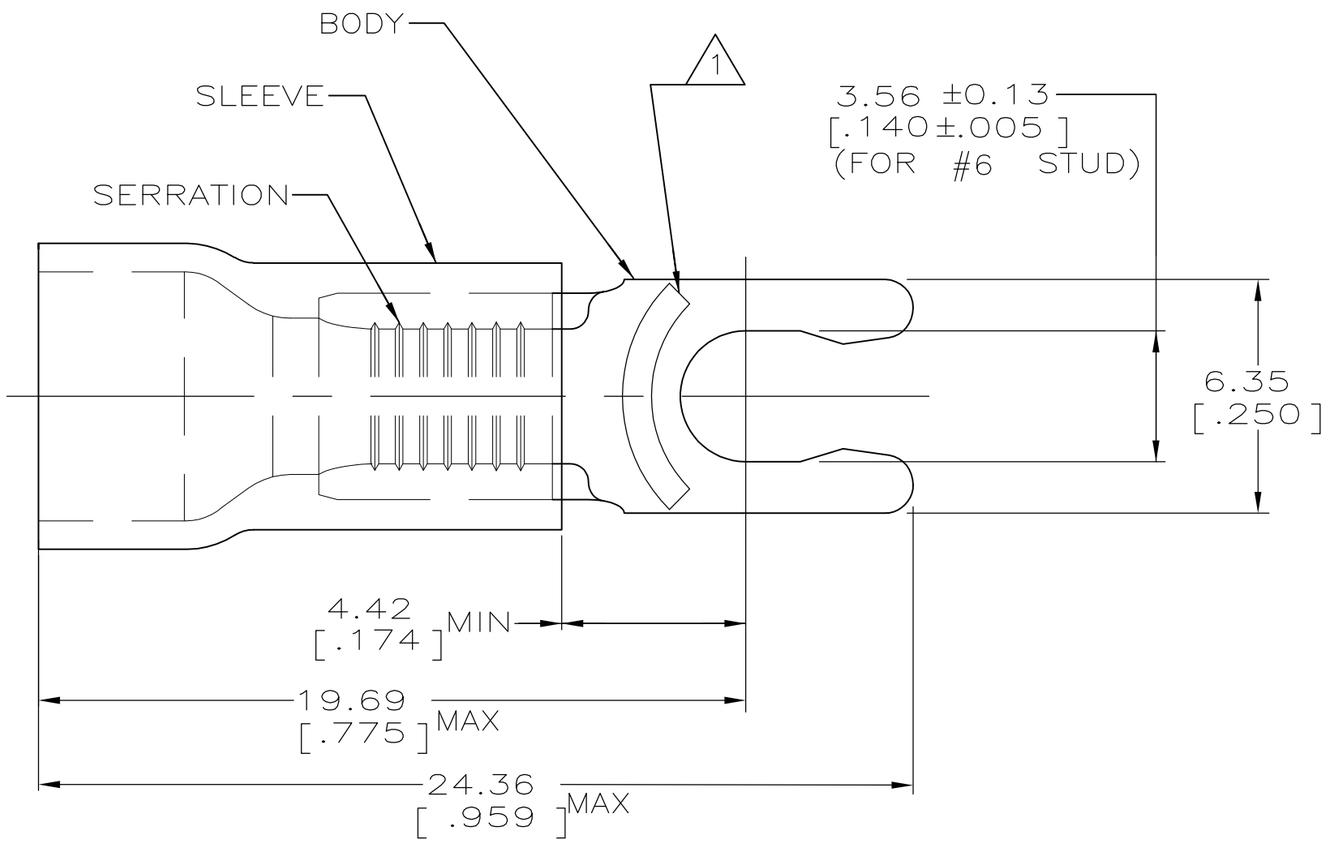


1. STAMP 6SAMP 12-10* APPROX AS SHOWN
2. WIRE INSUL DIA, 2.67-5.08 [.105-.200]
3. TONGUE MATL THK, 1.02±0.05 [.040±.002]
4. MATERIAL: BODY - BRASS PER ASTM B36
   SLEEVE - PVC, COLOR - YELLOW

| QTY | PACKAGE TYPE | PART NO |
|---|---|---|
| 50 | LOOSE PIECE, BOX | 8-52961-2 |
| 2500 | ON TAPE, REEL | 52961-1 |
| 500 | LOOSE PIECE | 52961 |

AMP INCORPORATED
CUSTOMER SERVICE SYSTEMS

| | |
|---|---|
| FOR ADDITIONAL PRODUCT INFORMATION OR COPIES OF DRAWINGS AND TECHNICAL DOCUMENTS | PRODUCT INFORMATION CENTER 1-800-522-6752 |
| FOR APPLICATION TOOLING INFORMATION | TOOLING ASSISTANCE CENTER 1-800-722-1111 |
| FOR ORDER ENTRY | 1-800-526-5142 |

MAX RECOMMENDED OPERATING TEMPERATURE: 105°C [221°F]

VOLTAGE RATING: 600V MAX (1000V FIXTURE OR SIGN)

CIRCULAR MIL AREA: 2.62-6.64mm² [5,180-13,100] SOLID OR STRANDED

THIS DRAWING IS A CONTROLLED DOCUMENT FOR AMP INCORPORATED. IT IS SUBJECT TO CHANGE AND THE CONTROLLING ENGINEERING ORGANIZATION SHOULD BE CONTACTED FOR THE LATEST REVISION.

THIS DRAWING IS A CONTROLLED DOCUMENT.

DIMENSIONS: mm[INCHES]

TOLERANCES UNLESS OTHERWISE SPECIFIED:

| | |
|---|---|
| 0 PLC | ± - |
| 1 PLC | ± - |
| 2 PLC | ± 0.20 [.008] |
| 3 PLC | ± - |
| 4 PLC | ± - |
| ANGLES | ± - |

MATERIAL: 4

FINISH: TIN PER ASTM B545

| | | |
|---|---|---|
| DWN | L OLMEDA | 26JUN95 |
| CHK | M ELLIS | 26JUN95 |
| APVD | G NGO | 26JUN95 |
| PRODUCT SPEC | UL 486A | |
| APPLICATION SPEC | — | |
| WEIGHT | — | |

TE Connectivity

NAME: TERMINAL, SPRING SPADE, SHORT, PLASTI-GRIP WIRE SIZE 12-10 AWG

| SIZE | CAGE CODE | DRAWING NO | RESTRICTED TO |
|---|---|---|---|
| A3 | 00779 | C-52961 | — |

CUSTOMER DRAWING | SCALE 6:1 | SHEET 1 OF 1 | REV S1

1470-19 (3/11)