Alle Rechte vorbehalten/ *All rights reserved*

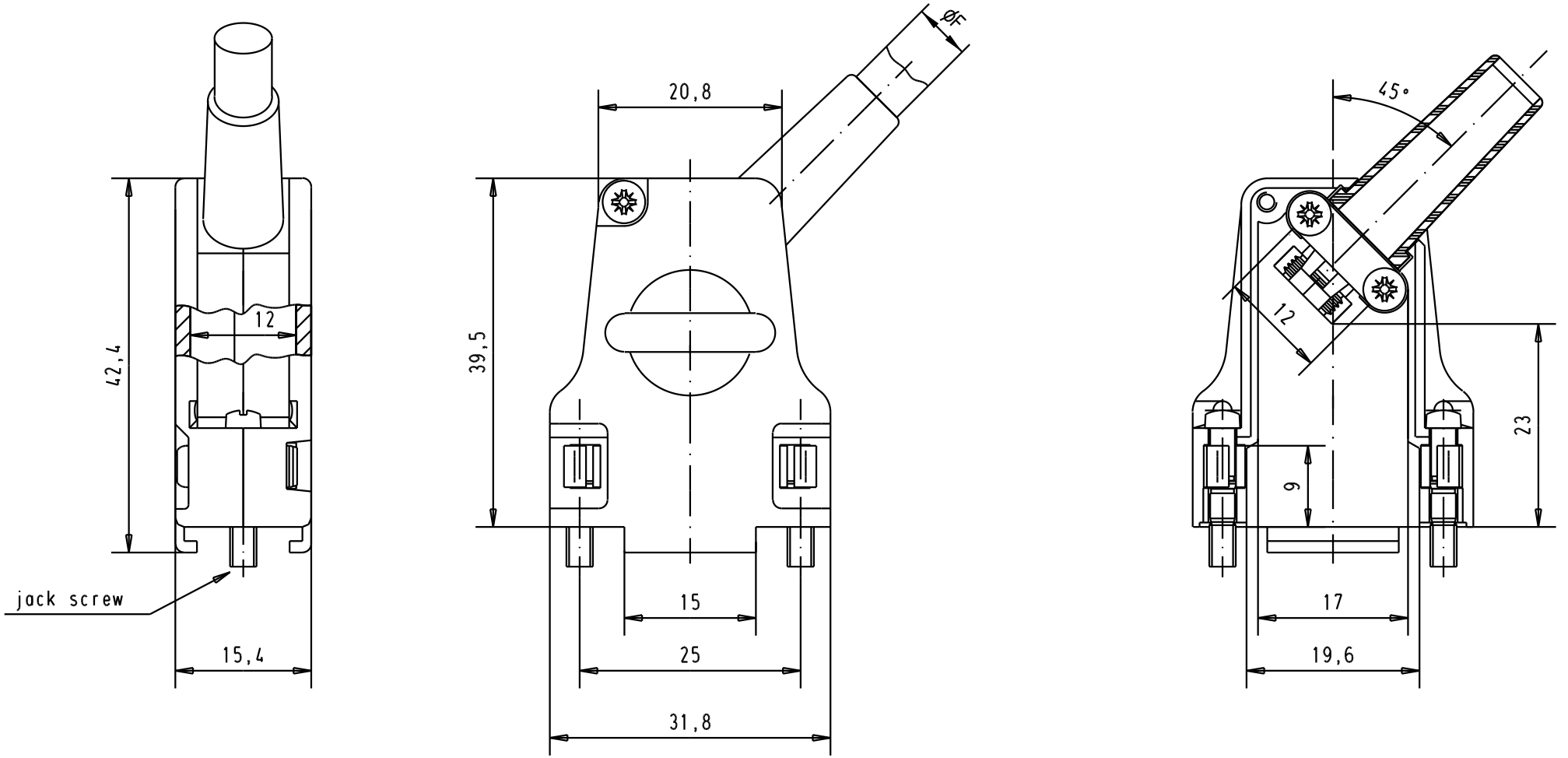

with rubber bushing: ØFmax=6,5
without rubber bushing: ØFmin=3
ØFmax=9,5

							Dat.	Name		D-Sub, Right angled metal hood 9 poles	Maßstab/ *Scale*
						Detail.	13/09/05	JMDR	All Dim. in mm Orig. Size DIN A 4		1.5:1
						Insp.					
						Stand.					
09 67 009 0335	M3								HARTING EURL F-95972 Paris	TB 0967009033X	Blatt/ *Page*
09 67 009 0334	4-40 UNC		33096	13/09/05	JMDR						2/2
Part number	Jack screw thread		Mod.	Dat.	Name					Sub.	