PART NO. AND CH. CODE	MATERIAL	COLOR
7183-7976-60	PBT	GREEN
⚠1 7183-7976-40	PBT	LIGHT GRAY

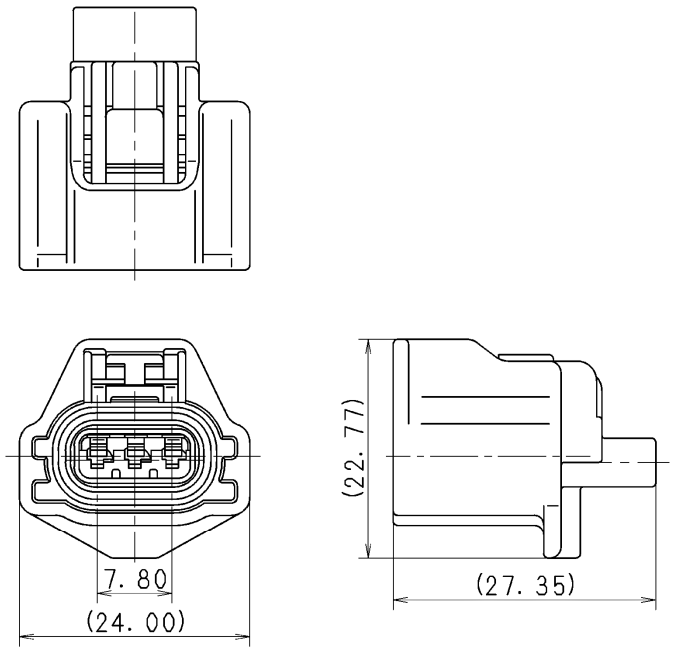

注記

1. 適用フロントホルダ品番	:	7158-4892
2. 適用端子品番	:	7116-1466-02 ETC.
3. 適用ゴム栓品番	:	7158-3120-90 ETC.
4. 適用防水栓品番	:	7157-3992-90
5. 材質 ハウジング	:	表参照
リップパッキン	:	シリコンゴム 色 : 茶色

NOTES

1. APPLICABLE FRONT HOLDER NO.	:7158-4892
2. APPLICABLE TERMINAL NO.	:7116-1466-02 ETC.
3. APPLICABLE SEAL RUBBER NO.	:7158-3120-90 ETC.
4. APPLICABLE RUBBER STOPPER NO.	:7157-3992-90
5. MATERIAL HOUSING	: SEE TABLE
LIP PACKING	: SILICONE RUBBER COLOR : BROWN

ISSUE MARK

LET	DATE	REVISION RECORD	NO.	CHKD
⚠2	10. 11. 15	CHANGED PART NAME	C10-ZB08	J. G
⚠1	02. 01. 28	CHANGED NOTE & ADDED COLOR NO. ETC.	C02-X108	O. S
	98. 02. 23	NEW	C98-L280	M. T

GENERAL TOLERANCE

	10MAX	50MAX	100MAX	250MAX	2500VR	ANGLE	ECCENT
A	±0. 15	±0. 2	±0. 3	±0. 5	±0. 75	±30′	0. 1
B	±0. 2	±0. 3	±0. 55	±0. 95	±1. 4	±30′	0. 1
Ⓒ	±0. 3	±0. 5	±0. 8	±1. 4	±2	±30′	0. 15

SPECIFIED

MASS

CUSTOMER

CUSTOMER PART NO. | CUSTOMER DWG NO.

OFFICE | TRIAL PART NO.

VENDOR

VENDOR NO.

DWG TYPE	DWG SOURCE	DWG DATE	UNIT	SCL	ANGLE
R	NEW	98. 02. 23	mm	2:1	3

APPROVED	CHECKED	CHECKED	DESIGN	DRAWN
S. MIZUSE	———	R. DE GUZMAN	O. SUGIYAMA	J. GAMBOA
10. 11. 15	———	10. 11. 15	97. 09. 12	10. 11. 15

MATL. SPEC. SEE NOTES

TREAT. & FIN.

NAME ⚠2 RK-TYPE HOUSING 3P

FEMALE (G, LY)

PART NO. CH. CODE ⚠1 7183-7976-60 ETC.

DWG NO. 7183-7976-60:R

SET DWG NO.

YAZAKI CORPORATION