Jan.1.2022 Copyright 2022 HIROSE ELECTRIC CO., LTD. All Rights Reserved.
In case of consideration for using Automotive equipment / device which demand high reliability, kindly contact our sales window correspondents.

| | COUNT | DESCRIPTION OF REVISIONS | BY | CHKD | DATE | | COUNT | DESCRIPTION OF REVISIONS | BY | CHKD | DATE |
|---|---|---|---|---|---|---|---|---|---|---|---|
| △ | | | | | . . | △ | | | | | . . |
| △ | | | | | . . | △ | | | | | . . |
| △ | | | | | . . | △ | | | | | . . |

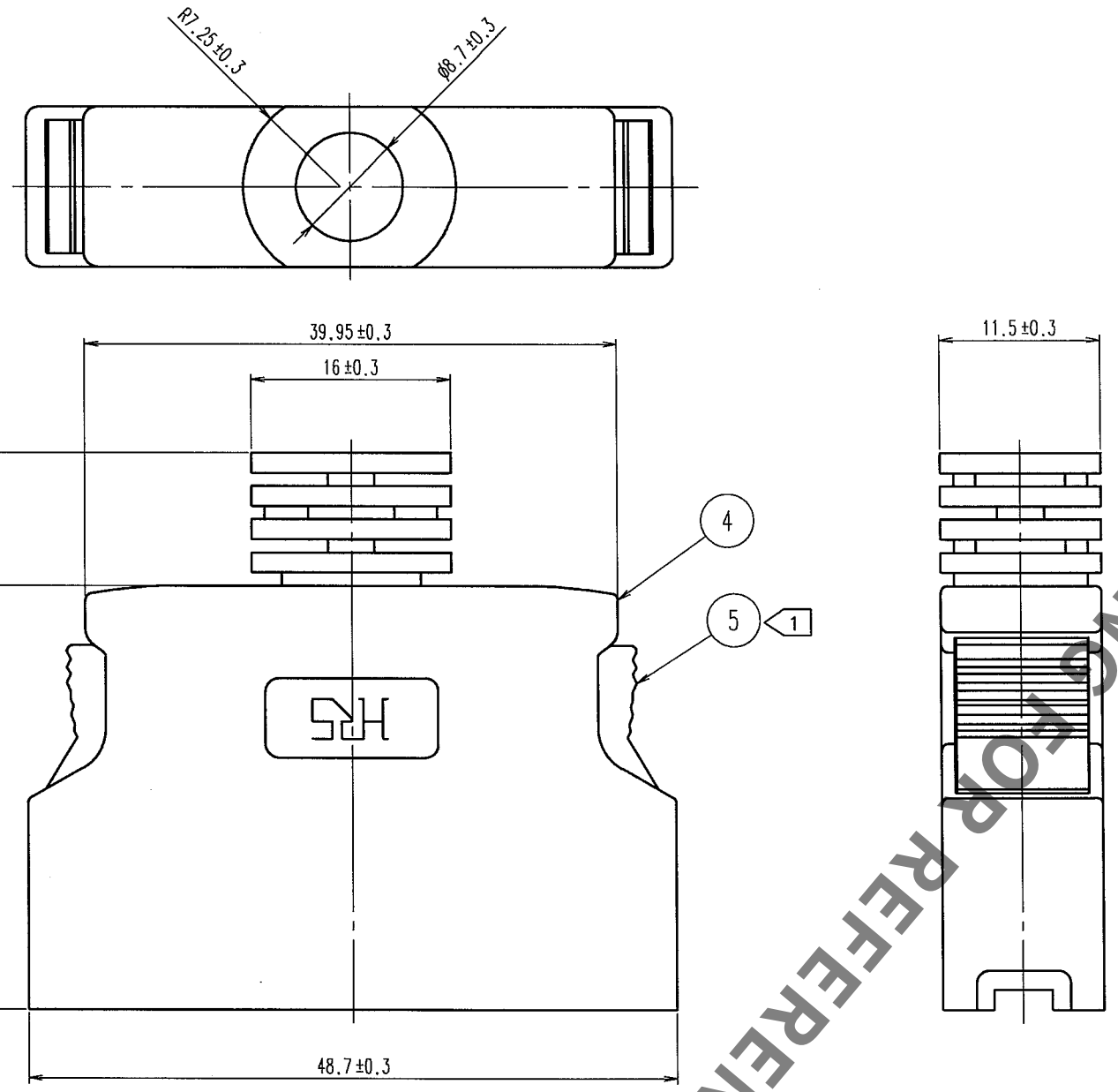


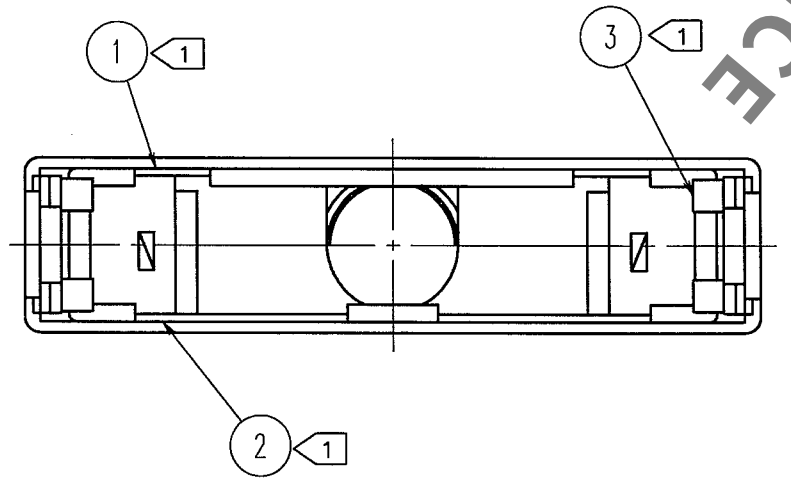


HRS DRAWING FOR REFERENCE

NOTE1:PARTS NO.①②③ AND ⑤ ARE APPENDED PRODUCTS.

| NO. | MATERIAL | FINISH, REMARKS | NO. | MATERIAL | FINISH, REMARKS |
|---|---|---|---|---|---|
| 3 | STAINLESS STEEL | | | | |
| 2 | STAINLESS STEEL | | 5 | POLYCARBONATE | (COLOR:LIGHT BEIGE)UL94V-2 |
| 1 | STAINLESS STEEL | | 4 | POLYCARBONATE | (COLOR:LIGHT BEIGE)UL94V-2 |

| CODE NO.(OLD) | DRAWN | DESIGNED | CHECKED | APPROVED | RELEASED |
|---|---|---|---|---|---|
| CL? | T.Ito 04.7.15 | T.Ito 04.7.15 | Y.Enami 04.07.15 | H.Miura 04.07.15 | . . |

| | | |
|---|---|---|
| SCALE 2 : 1 | DRAWING NO. EDC3-042483-01 | PART NO. DX30M-50-CV |
| UNITS mm | HRS HIROSE ELECTRIC CO., LTD | CODE NO. CL230-5055-8 1/1 |

FORM NO.229

| TO |
|---|
| Q1 |
| |
| |
| |