Alle Rechte vorbehalten/ *All rights reserved*

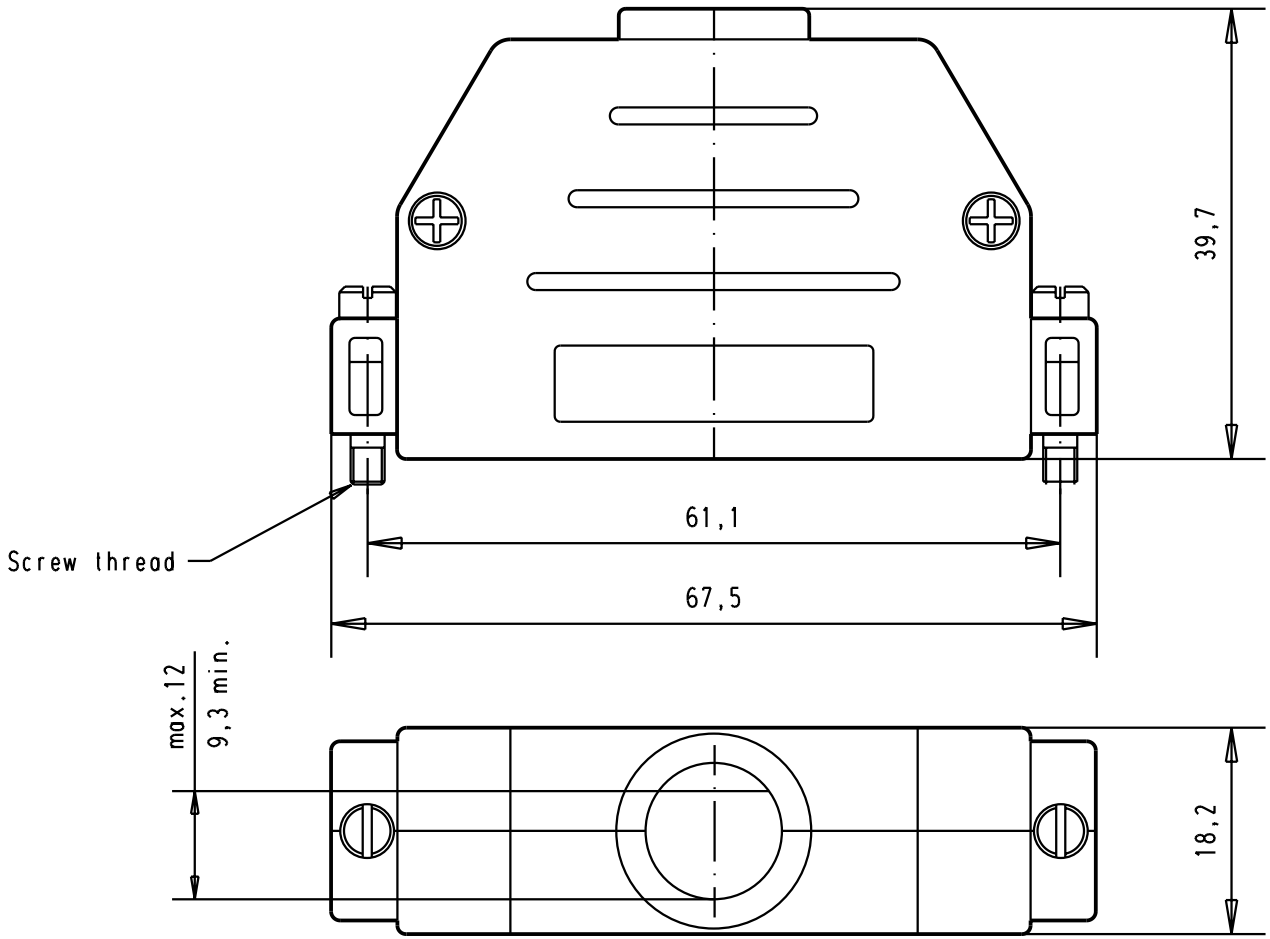

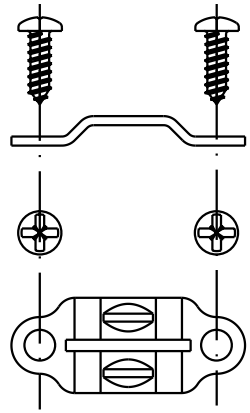

09 67 050 0423	M3				
09 67 050 0443	4-40 UNC		31085	4-SEP-02	CV
Part number	Screw thread		Mod.	Dat.	Name

	Dat.	Name
Detail.	4-SEP-02	CV
Insp.		
Stand.		

All Dim. in mm
Orig. Size DIN A 4

D-Sub, thermoplastic metallized hood, 50 poles with short locking screws.

Maßstab/ *Scale* 1.5:1

HARTING EURL
F-95972 Paris

TB 0967 050 04x3

Sub.

Blatt/ *Page* 1/