ROHS COMPLIANT

PRODUCT DATA DRAWING

REVISION HISTORY			
REV	DESCRIPTION	DATE	APPROVED
D	DCN 48207	12/18	STW

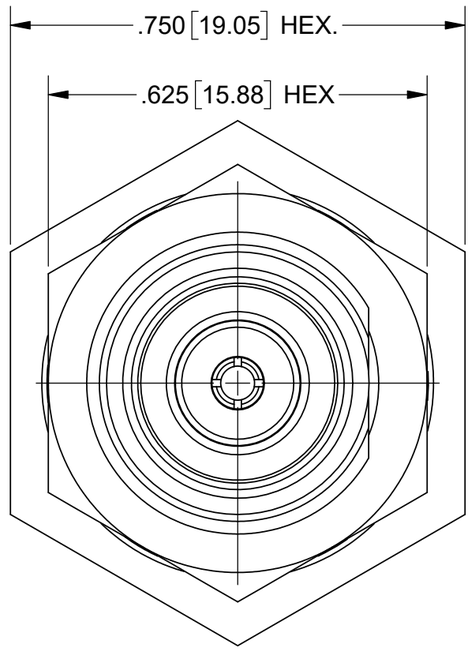

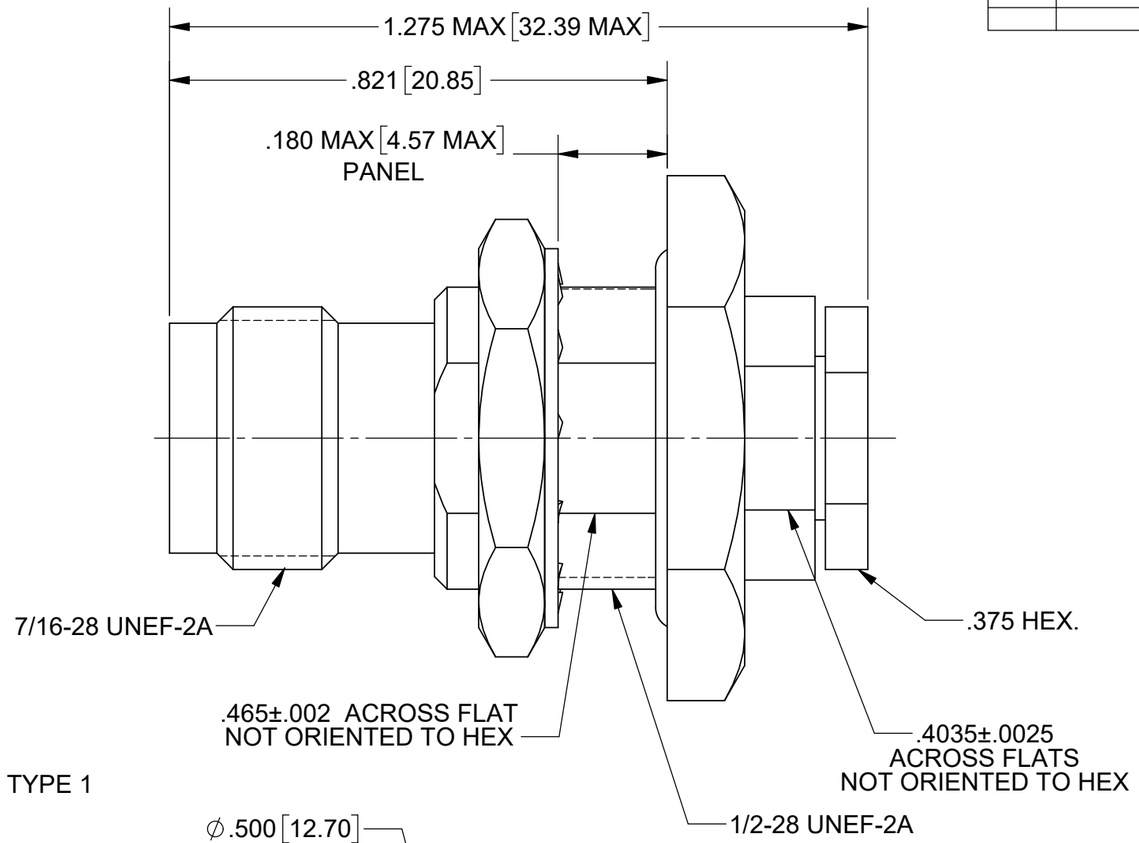

MATERIAL:

BODY, SLEEVE, HEX NUT, CLAMP NUT& FERRULE:	STAINLESS STEEL PER AMS-5640, ALLOY UNS S30300, TYPE 1
CONTACT:	BERYLLIUM COPPER PER ASTM B196, ALLOY No. UNS C17300, TD04
INSULATOR:	PTFE PER ASTM D1710, TYPE I, GRADE 1, CLASS B
O-RING:	SILICONE RUBBER PER A-A-59588, CLASS 2B, GRADE 50/60
LOCKWASHER:	300 SERIES STAINLESS STEEL

FINISH:

BODY, SLEEVE, HEX NUT, CLAMP NUT & LOCKWASHER:	PASSIVATED PER AMS-2700.
CONTACT & FERRULE:	GOLD PER ASTM B488, TYPE II, CODE C, CLASS 0.76, OVER NICKEL PER AMS-QQ-N-290, CLASS 1, .00010" MIN.

PERFORMANCE:

IMPEDANCE:	50 OHMS
FREQ. RANGE:	DC TO 18.0 GHz
VSWR:	1.05 + .007(F IN GHz) DC TO 18.0 GHz
INSERTION LOSS:	.04 X SQRT(F(F IN GHz))

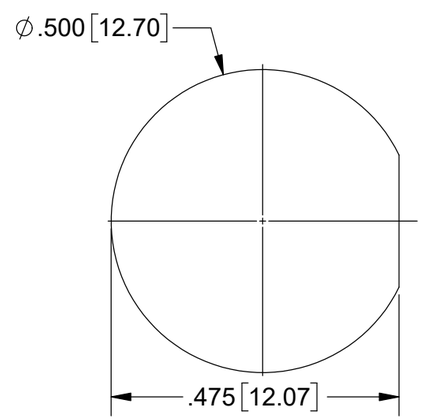

RECOMMENDED MOUNTING HOLE

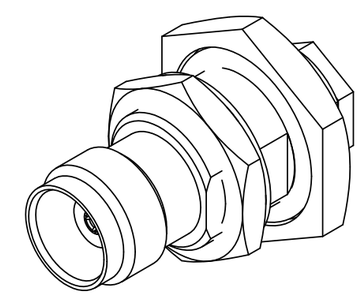

MATERIAL:	SEE NOTES
FINISH:	SEE NOTES
SURFACE AREA:	N/A

PROPRIETARY

THE INFORMATION CONTAINED IN THIS DRAWING IS THE SOLE PROPERTY OF SV MICROWAVE, INC. ANY REPRODUCTION IN PART OR AS A WHOLE WITHOUT THE WRITTEN PERMISSION OF SV MICROWAVE, INC IS PROHIBITED.

DIMENSIONS ARE IN INCHES TOLERANCES:

FRACTIONAL: ±1/64 ANGULAR: X° ±1°0' X°X' ±15'

DECIMAL: .X ±.030 .XX ±.010 .XXX ±.005

INTERPRET DIMENSIONS AND TOLERANCES PER ASME Y14.5M - 1994

THIRD ANGLE PROJECTION

UNLESS OTHERWISE SPECIFIED

1) ALL DIMENSIONS ARE IN INCHES [MILLIMETERS]
2) ALL DIMENSIONS ARE AFTER PLATING.
3) BREAK CORNERS & EDGES .005 R. MAX.
4) CHAM. 1ST & LAST THREADS.
5) SURFACE ROUGHNESS 63₊MIL-STD-10.
6) DIA.'S ON COMMON CENTERS TO BE CONCENTRIC WITHIN .005 T.I.R.
7) REMOVE ALL BURRS

DRAWN:	GEE 09/26/85	
CHECKED:	CT 10/85	
APPROVED:	RD 10/07/85	

SV Microwave, Inc.

www.svmicrowave.com

TITLE: PTNC JACK BULKHEAD MOUNT FOR .141 S.R. CABLE

SIZE B | DWG. NO. SF4546-6010

SCALE: 2:1 | SHEET 1 OF 1