版 本	变 更 内 容	工程确认	日 期

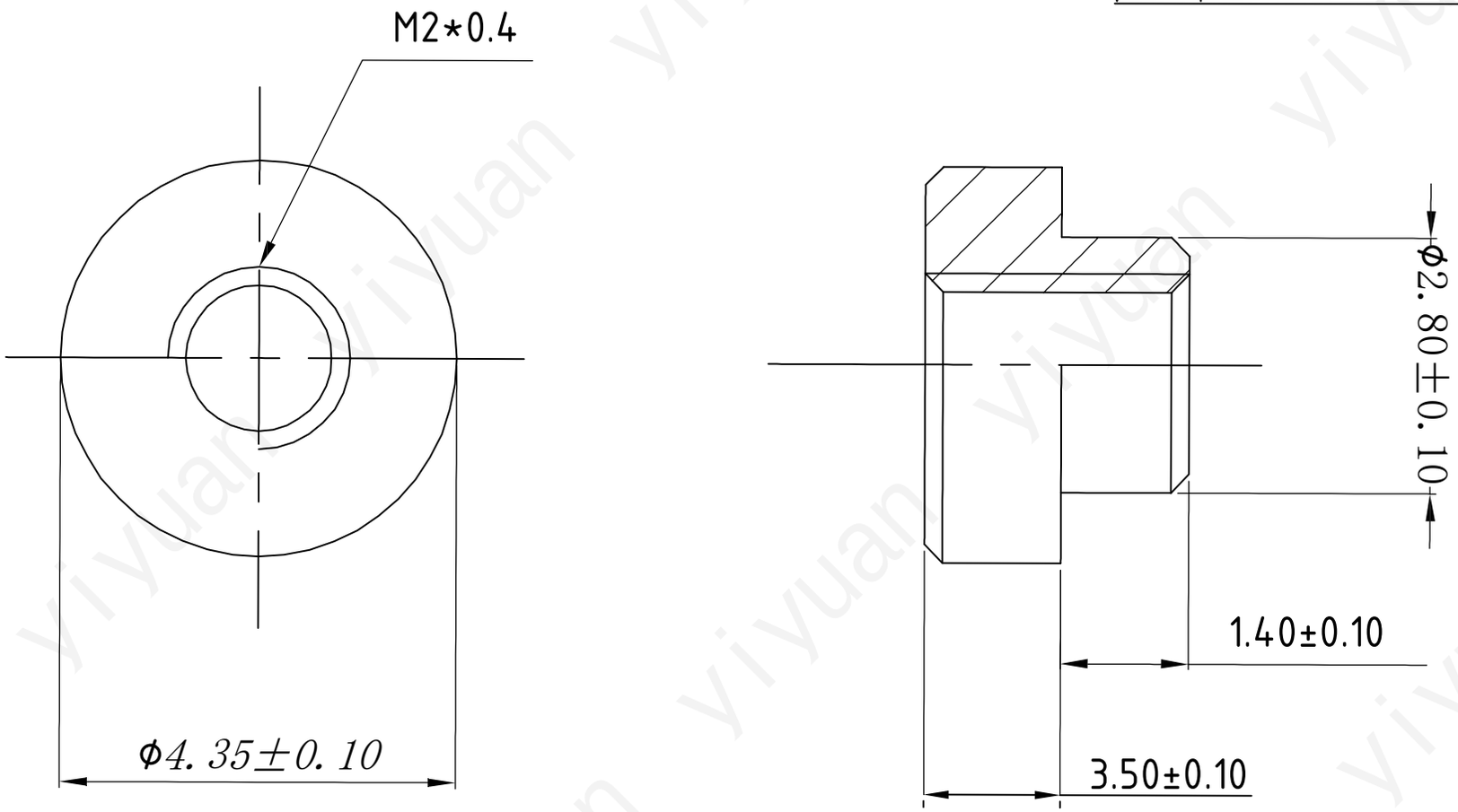

NOTES:
1. Material:Steel 1215;
2. Surface Treatment: Tin Matte 2-3μm over Nickel 1-3μm;
3. Remove all burrs and sharpe angle .product is clean;
4. Packaged on 13″ recyclable reels, Tape width is 24mmSupplied with polyamide patch for vacuum pick up, Reels conform to EIA-481 ;
5. RoHS Compliant.

品牌(BRAND)	广东怡远 — YIYUANXNY®	页码(SHEET)	1/1	单位(UNIT):MM
		版本(REV)	A1	比例(SCALE)
工厂(FACTORY)	广东怡远科技有限公司 GUANGDONG YIYUAN TECHNOLOGY CO.,LTD	日期(DATE)	2021.10.12	
		设计(DESIGN)	LUO	未注公差 TOLERANCE UNSPECIFIED
品名(ITEM NO)	M2×4.35×3.5+1.4 铁镀亮锡	审核(CHECKED)	ROGER LI	X. ±0.20 X.° ±4° .X ±0.10 .X° ±2° .XX ±0.05 .XX° ±1°
料号(PART NO)	SMTWEM235STR	核准(APPROVED)	ROC ZHAO	

These drawings and specifications are Yiyuan Technology Co Ltd.The property should not be copied. Without Yiyuan Technology Co. Ltd.Prior written consent to copy or use in any way.