版 本	变 更 内 容	工程确认	日 期

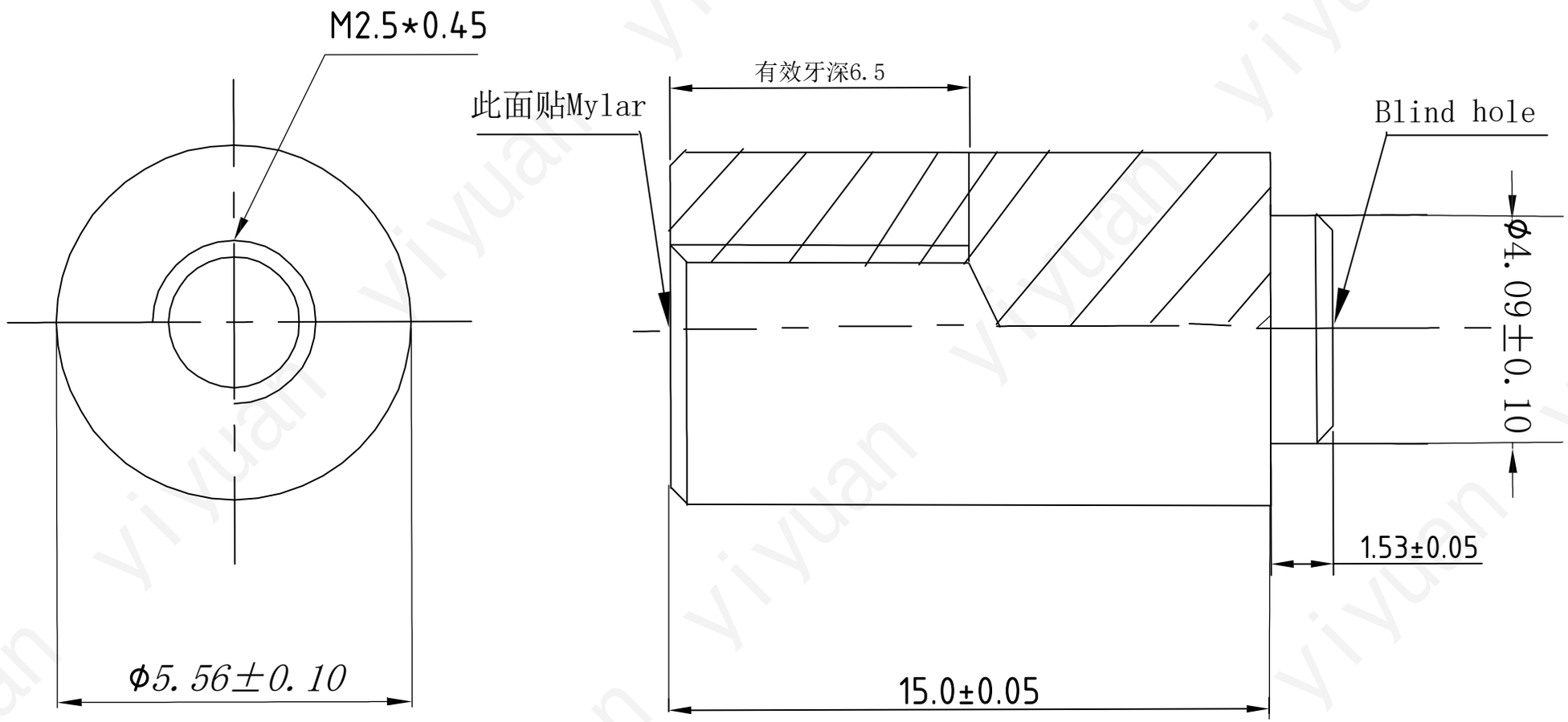

NOTES:
1. Material:Cu C3604;
2. Surface Treatment: Tin Matte 2-3μm over Nickel 1-3μm;
3. Remove all burrs and sharpe angle .product is clean;
4. Packaged on 13″ recyclable reels, Tape width is 24mmSupplied with polyamide patch for vacuum pick up, Reels conform to EIA-481 ;
5. RoHS Compliant.

品牌(BRAND)	广东怡远 YIYUANXNY®	页码(SHEET)	1/1	单位(UNIT):MM
		版本(REV)	A1	比例(SCALE)
工厂(FACTORY)	广东怡远科技有限公司 GUANGDONG YIYUAN TECHNOLOGY CO.,LTD	日期(DATE)	2021.10.12	
		设计(DESIGN)	LUO	未注公差 TOLERANCE UNSPECIFIED
品名(ITEM NO)	M2.5x5.56xL15+1.53黄铜镀雾锡 盲孔	审核(CHECKED)	ROGER LI	X. ±0.20 X.° ±4° .X ±0.10 .X° ±2°
料号(PART NO)	SMTSOM2.5150BTRBM	核准(APPROVED)	ROC ZHAO	.XX ±0.05 .XX° ±1°

These drawings and specifications are Yiyuan Technology Co Ltd.The property should not be copied. Without Yiyuan Technology Co. Ltd.Prior written consent to copy or use in any way.