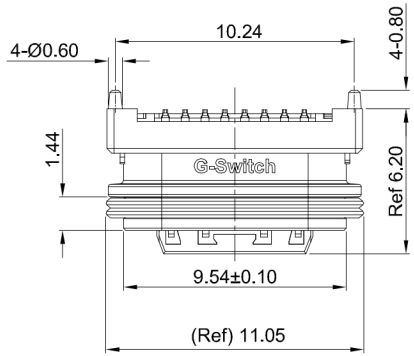

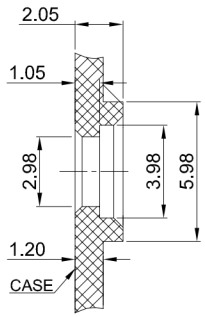

SECTION C-C

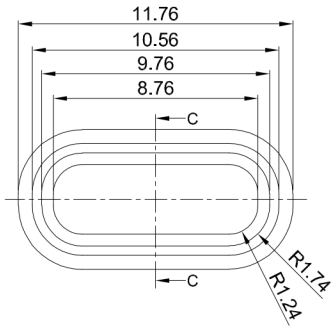

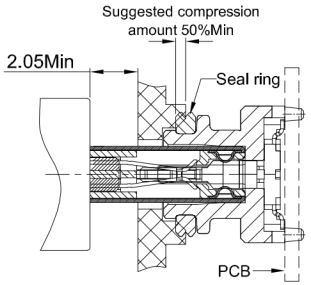

RECOMMENDED ASSEMBLY

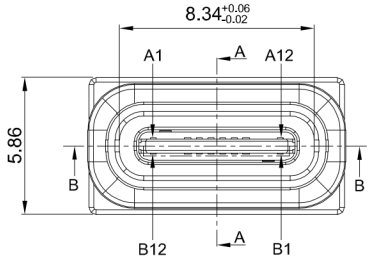

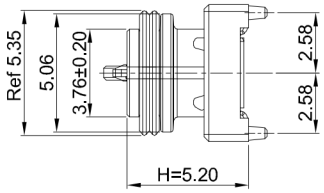

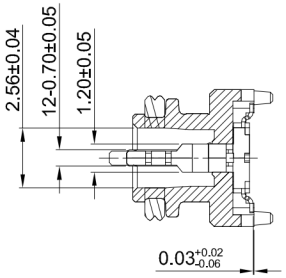

SECTION A-A

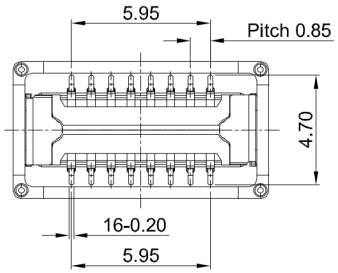

G-Switch USB-C Specification:

1. Current rated: 5A on vbus/1.25A on vconn/0.25A on other Voltage rating: 24V AC
2. Withstanding voltage: 100V AC/minute
3. Contact resistance: 40mΩ Max
4. Insulation resistance: 100MΩ Min
5. Operating temperature: -40°C ~ +85°C
6. Mating force: 5N~20N
7. Unmating force: 8N~20N
8. Durability cycle:10,000 cycles
9. Waterproof grade: IP-X8.

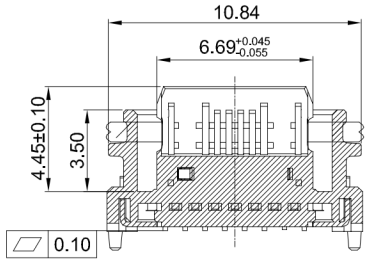

SECTION B-B

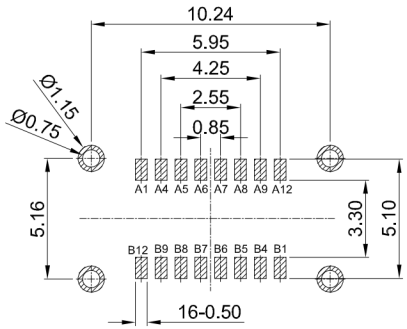

RECOMMENDED PCB LAYOUT
TOLERANCE:±0.05

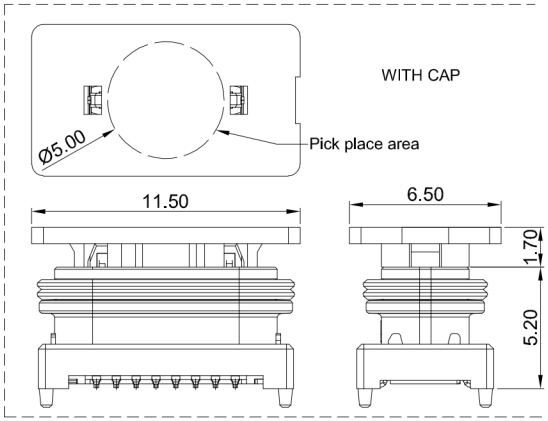

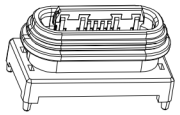

A1	A2	A3	A4	A5	A6	A7	A8	A9	A10	A11	A12
GND			VBUS	CC1	D+	D-	SBU1	VBUS			GND
First			First	Second	Second	Second	Second	First			First

B12	B11	B10	B9	B8	B7	B6	B5	B4	B3	B2	B1
GND			VBUS	SBU2	D-	D+	CC2	VBUS			GND
First			First	Second	Second	Second	Second	First			First

NO.	PARTS	MATERIAL	REMARKS
1	METAL COVER	STAINLESS STEEL201	CLEAN
2	SHELL	POWDER METALLURGY	Ni PLATED
3	MID PLATE	STAINLESS STEEL201	Ni PLATED
4	HOUSING	HIGH TEMPERATURE PLASTIC	PA9T BLACK UL 94 V-0
5	TERMINALS	COPPER ALLOY C2680	Au PLATING ON CONTACT AREA Tin PLATING ON SOLDER AREA
6	RUBBER	SILICA GEL	BLACK

Pb Process Capable

RoHS Compliant EU RoHS Standards

HALOGEN Compliant Halogen Free

SCALE: 1:1	UNIT: mm	Title:	Vertical Type-c 16P Female SMT H=5.2mm
SIZE: A4			
Unless otherwise General Tolerance:		Molde Code:	GT-USB-7115A
X. ±0.40		DRAWN	CHECKED / APPROVED / DATE
X.x ±0.30			
X.xx ±0.20			
X.xxx ±0.10			
X° ±5°		Xia	Chen / Chen / 2024.03.10

品赞科技 b-Switch ®
www.dg-switch.com

REV: A0 SHEET: 1/1