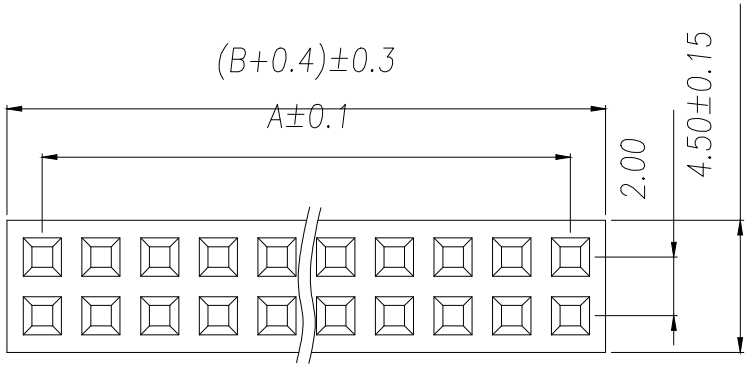

SPECIFICATIONS

Current Rating: 1.5 Amps
Insulation Resistance: 1000MΩ Min
Contact Resistance: 20mΩ Max
Withstanding Voltage: AC 500V
Operation Temperature: −40°to+105°
Contact Material: Brass
Standard: PA6T
Insrlator Material: Polyester(UL 94V−0)
Contact Plating: Gold Flash
Max.Processing Temp: 240°C for30−60seconds
(260°C for 5 seconds)

P/N	PIN	DIM.A	DIM.B
ZX−PM2.0−2− 1PY	1	0.00	2.00
ZX−PM2.0−2−2PY	2	2.00	4.00
ZX−PM2.0−2−3PY	3	4.00	6.00
ZX−PM2.0−2− 4PY	4	6.00	8.00
ZX−PM2.0−2− 5PY	5	8.00	10.00
ZX−PM2.0−2− 6PY	6	10.00	12.00
ZX−PM2.0−2− 7PY	7	12.00	14.00
ZX−PM2.0−2− 8PY	8	14.00	16.00
ZX−PM2.0−2− 9PY	9	16.00	18.00
.....	.....	.....	.....
ZX−PM2.0−2−40PY	40	(PIN−1)x2.0	(PIN)x2.0

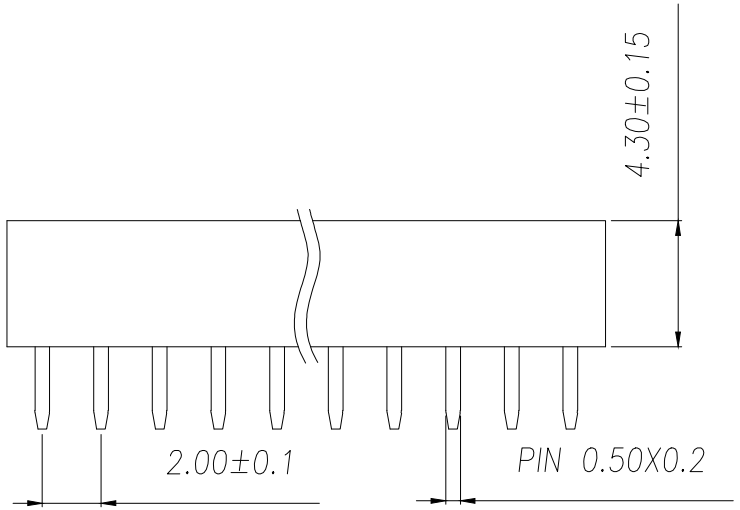

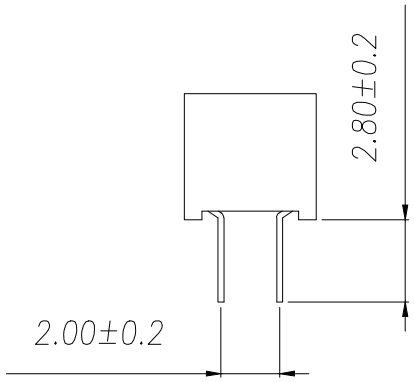

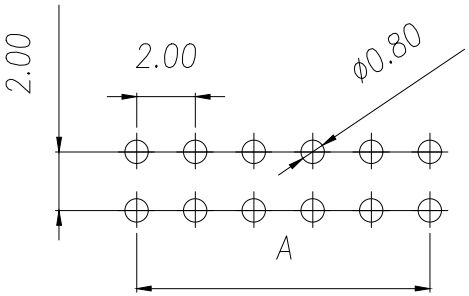

RECOMMEND P.C.B LAYOUT
PCB TOLERANCE:±0.05 (TOP VIEW)

制图 DRAWN	变更内容 DESCRIPTION	日期 DATE

GENERL TOLERANCE		制图 DRAWING	Yu	料号 PART NO.	ZX−PM2.0−2−NPY	版本 REV.	A
DECIMALS:	ANGLES:	审核 CHECK	HUANG	品名 TITLE	2.0FH H4.3 2xnPin 180度 W4.5 U型 PC2.8 6T	页次 SHEET	1/1
X.±0.30	X°±5°			客户料号 CUTM.NO.			
X.X±0.20	X.X°±1°	核准 APPROVAL	RUAN				
X.XX±0.10	X.XX°±0.5°	单位 UNITS	MM	比例 SCALE	1:1		

兆星精密电子（深圳）有限公司
ShenZhen ZhaoXing Precision electronics Co., Ltd.