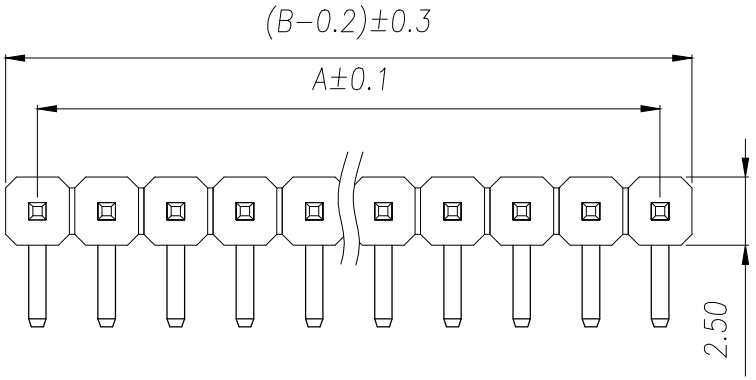

SPECIFICATIONS

Current Rating: 3Amps
Insulation Resistance: 1000MΩ Min
Contact Resistance: 20mΩ Max
Withstanding Voltage: AC 1000V
Operation Temperature:-40° to+105°
Contact Material: Brass
Standard: PA6T
Insrlator Material: Polyester(UL 94V-0)
Contact Plating: Gold Flash
Max.Processing Temp:240°C for30-60seconds
(260°C for5seconds)

P/N	PIN	DIM.A	DIM.B
ZX-PZ2.54-1- 1PWZ	1	0.00	2.54
ZX-PZ2.54-1- 2PWZ	2	2.54	5.08
ZX-PZ2.54-1- 3PWZ	3	5.08	7.62
ZX-PZ2.54-1- 4PWZ	4	7.62	10.16
ZX-PZ2.54-1- 5PWZ	5	10.16	12.70
ZX-PZ2.54-1- 6PWZ	6	12.70	15.24
ZX-PZ2.54-1- 7PWZ	7	15.24	17.78
ZX-PZ2.54-1- 8PWZ	8	17.78	20.32
ZX-PZ2.54-1- 9PWZ	9	20.32	22.86
.....	.....	.....	.....
ZX-PZ2.54-1-40PWZ	40	(PIN-1)X2.54	(PIN)X2.54

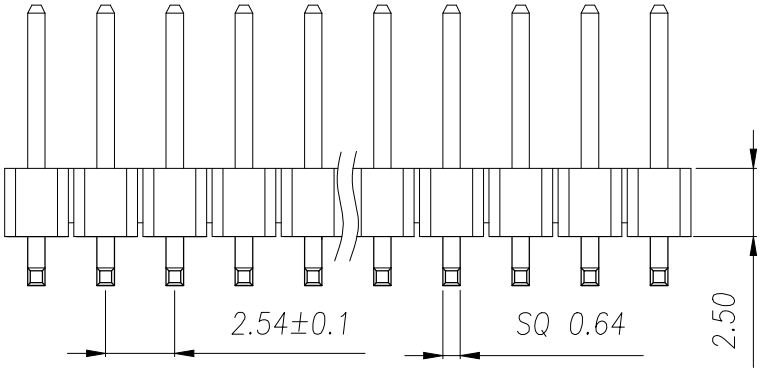

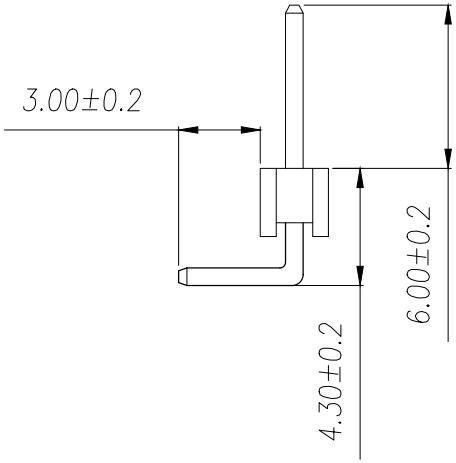

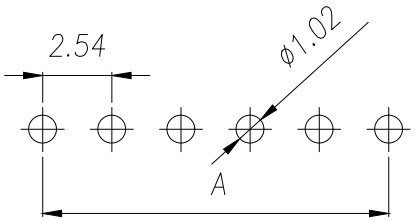

RECOMMEND P.C.B LAYOUT
PCB TOLERANCE:±0.05 (TOP VIEW)

制图 DRAWN	变更内容 DESCRIPTION	日期 DATE

GENERL TOLERANCE	
DECIMALS:	ANGLES:
X.±0.30	X°±5°
X.X±0.20	X.X°±1°
X.XX±0.10	X.XX°±0.5°

制图 DRAWING	Yu		
审核 CHECK	HUANG		
核准 APPROVAL	RUAN		
单位 UNITS	MM	比例 SCALE	1:1

料号 PART NO.	ZX-PZ2.54-1-NPWZ	版本 REV.	A
品名 TITLE	2.54PH H2.5 1xnPin 90度 PC3.0 PA6.0 PB4.3 L13.8 6T 单面面	页次 SHEET	1/1
客户料号 CUTM.NO.			

兆星精密电子（深圳）有限公司
ShenZhen ZhaoXing Precision electronics Co., Ltd.