CUSTOMER

REV.	ECN NO.	DESCRIPTION	DATE	DESIGN

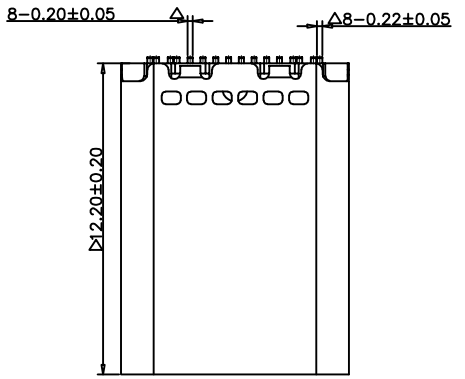

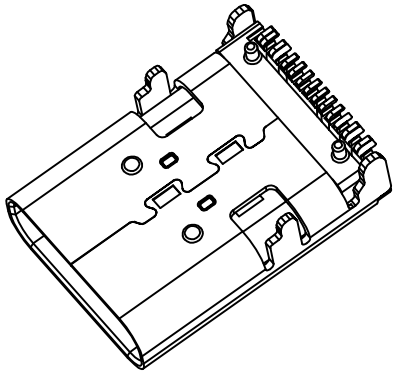

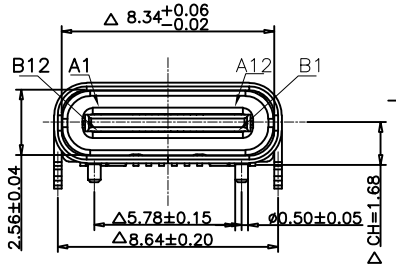

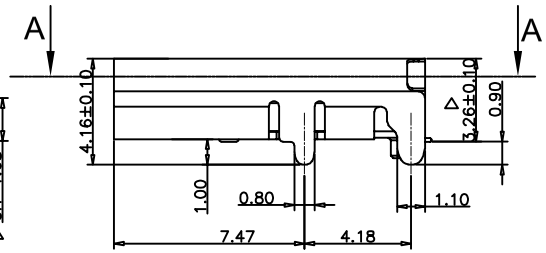

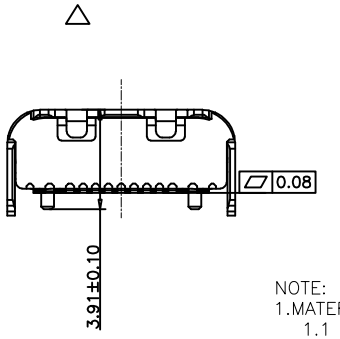

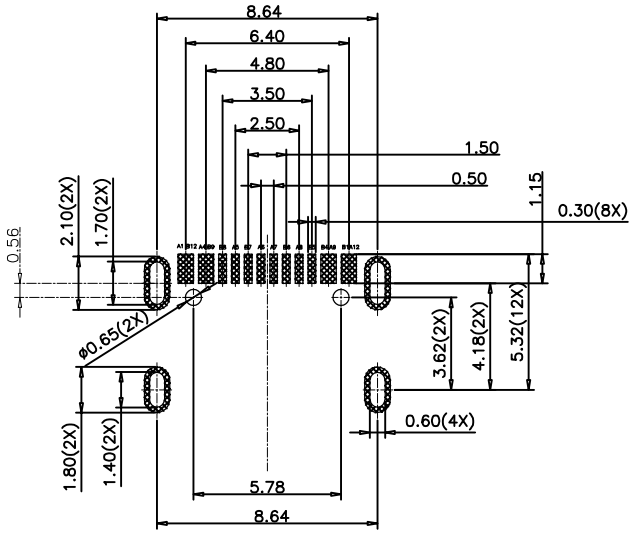

RECOMMENDED P.C.B LAYOUT

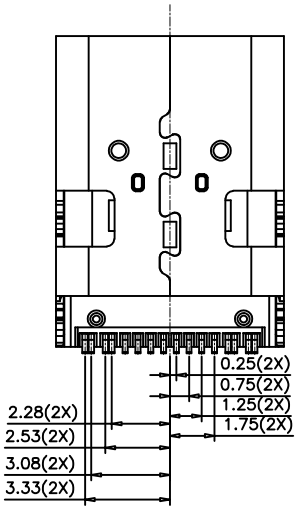

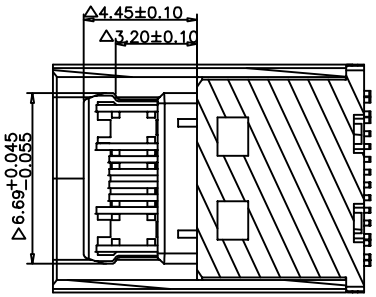

截面A-A

NOTE:
1.MATERIAL:
1.1 INSULATOR: HIGH TEMPERATURE PLASTIC UL 94V-0;
1.2 CONTACT: COPPER ALLOY
1.3 SHELL:STAINLESS STEEL
2.ELECTRICAL CHARACTERISTICS;
2.1 CONTACT RESISTANCE: 40mΩ Max FOR INITIAL. 30mΩ CHANGE AFTER TEST. MEASURE AT 20mV, 100mA.
2.2 CONTACT CURRENT RATING: 5A FOR VBUS PIN; 1.25A FOR VCONN PIN.
2.3 DIELECTRIC WITHSTANDING VOLTAGE: 100V AC R.M.S.
2.4 INSULATION RESISTANCE 100MΩ Min
2.5 OPERATING TEMPERATURE: −40°C ~ 85°C
3 MECHANICAL CHARACTERISTICS:
3.1 MATING FORCE: 5~20 N.
3.2 UNMATED FORCE: 8~20N AFTER TEST
3.3 DURABILITY: 10,000 CYCLES
4.PLATING
4.1 TERMINAL CONTACT: (SEE TAB) GOLD PLATING ALL OVER 50u" Min NICKEL
4.2 SHELL: 50u" Min. NICKEL ALL OVER,
5.TID 5719
6. " " Focus on size control

PIN ASSIGNMENT:

Pin No.	Signal Name	Pin No.	Signal Name
A1	CND	B12	CND
A2		B11	
A3		B10	
A4	VBUS	B9	VBUS
A5	CC1	B8	SBU2
A6	D+	B7	D−
A7	D−	B6	D+
A8	SBU1	B5	CC2
A9	VBUS	B4	VBUS
A10		B3	
A11		B2	
A12	CND	B1	CND

TOLERANCE		NAME(INTENDED USE) CUSTOMER DRAWING	FUYOU 广东富盈兴业精密科技实业有限公司 Guangdong FUYOU Precision Electronic Technology Co.,LTD.
X.X ±0.30	X.° ±10°	PART NO. FY23-3TC162F1121-01	TITLE: TYPE-C16P板上加长12.2L
.XX ±0.20	.X° ± 8°		
.XXX ±0.10	.XX° ± 5°	DESIGN: ZXM	DRAWG NO. FY23-3TC162F1121-01
UNITS	mm		
MATERILA	----	CHED:	SCALE 1:1 / SHEET 1/2 / REV. A
FINISH	-----	APPD:	