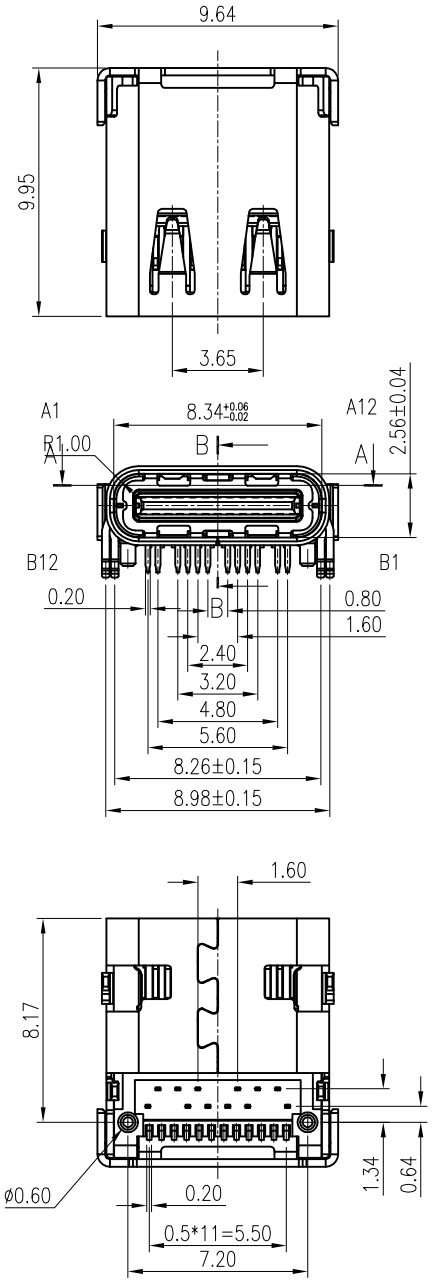


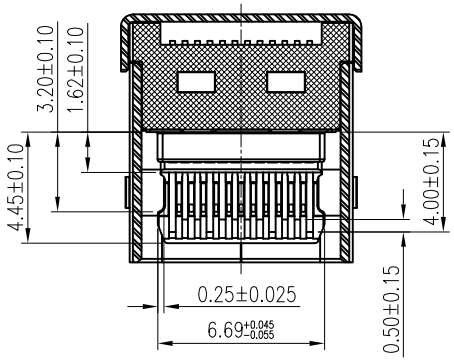


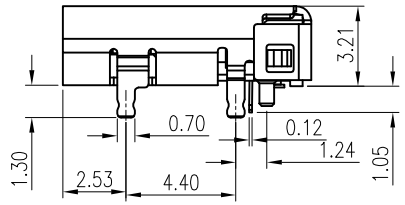


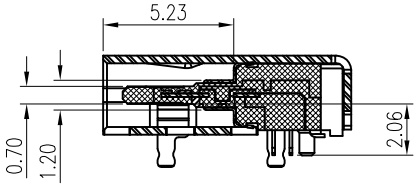


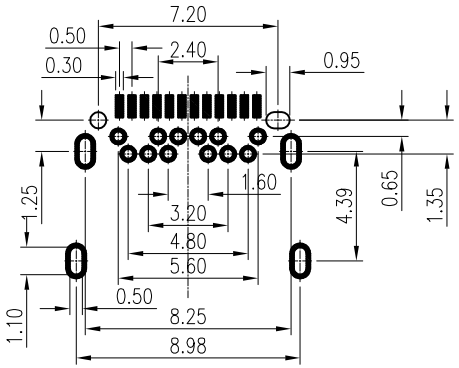


RECOMMENDED P.C.B LAYOUT
TOP VIEW(TOLERANCE±0.05)

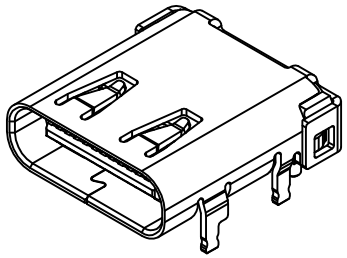

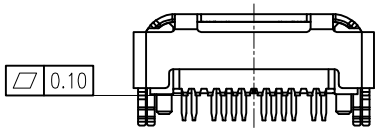


| | | | |
|---|---|---|---|
| A1 | GND | B12 | GND |
| A2 | SSTXP1 | B11 | SSRXP1 |
| A3 | SSTXN1 | B10 | SSRXN1 |
| A4 | VBUS | B9 | VBUS |
| A5 | CC1 | B8 | SBU2 |
| A6 | DP1 | B7 | DN2 |
| A7 | DN1 | B6 | DP2 |
| A8 | SBU1 | B5 | CC2 |
| A9 | VBUS | B4 | VBUS |
| A10 | SSRXN2 | B3 | SSTXN2 |
| A11 | SSRXP2 | B2 | SSTXP2 |
| A12 | GND | B1 | GND |
| PIN | SIGNAL NAMF | PIN | SIGNAL NAM |

NOTE:
1. MATERIAL:
   1.1 INSULATOR: HIGH TEMPERATURE PLASTIC UL 94 V-0; Black Color
   1.2 CONTACT: C7025(T=0.12mm)
   1.3 SHELL:STAINLESS STEEL(T=0.30mm)
   1.4 INNER GROUND COVER SHELL:STAINLESS STEEL(T=0.10mm)
   1.5 MID PLATE:STAINLESS STEEL(T=0.15mm)
2. ELECTRICAL CHARACTERISTICS;
   2.1 CONTACT RESISTANCE: 30mΩ Max FOR INITIAL. 10mΩ CHANGE AFTER TEST. MEASURE AT 20mV, 100mA.
   2.2 CONTACT CURRENT RATING: 5A FOR COLLECTIVELY POWER SUPPLY PIN(PINA1,A4,A9,A12,B1,B4,B9,B12); 1.25A FOR VCONN PIN; 0.25A FOR OTHER SIGNAL PIN.
   2.3 DIELECTRIC WITHSTANDING VOLTAGE: 100V AC R.M.S.
   2.4 INSULATION RESISTANCE 100MΩ Min
   2.5 OPERATING TEMPERATURE: -40° C ～ 85° C
3 MECHANICAL CHARACTERISTICS:
   3.1 MATING FORCE: 5~20 N.
   3.2 UNMATED FORCE: 8~20N INITIAL TEST; 6~20N DURABILITY AFTER TEST
   3.3 DURABILITY: 10,000 CYCLES
4. PLATING
   4.1 TERMINAL CONTACT: 1u"GOLD PLATING ON CONTACT AREA, ALL OVER 50u" Min NICKEL AND 1u"Min Matte GOLD ALL OVER 50u" Min NICKEL ON SOLDER AREA
   4.2 SHELL: 50u" Min. NICKEL ALL OVER,
   4.3 INNER GROUND COVER SHELL: CLEAN
   4.4 MID PLATE: CLEAN

| ECN BO. | | DESCRIPTION. | | DATE. | REV. | 瀚源 |
|---|---|---|---|---|---|---|
| ——— | | new | | 2015/5/3 | A | |
| DESIGNED | CHECKED | APPROVAL | DRAWING NUMBER | | SCALT: 1/2 | SCALE: 3:1 |
| Mikey | Tom | Jerry | PART NAME | 241N-4BV60 | UNLESS OTHERWISE SPECIFIED,TOLERANCE: | X. ±0.25<br>X.x ±0.20<br>X.xx ±0.15<br>ANGULAR ±3° |
| | | | MODEL NAME | 241N-4BV60 | | |
| | | | 3RD ANGLE PROJ | HanElectricity Co.,LTD | | FILE.NO. |