CUSTOMER

30 Min/1.5M
IP-X7

REV.	ECN NO.	DESCRIPTION	DATE	DESIGN

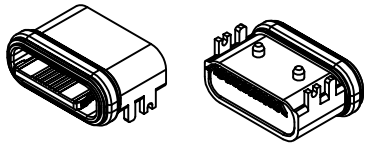

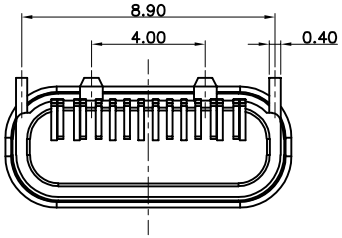

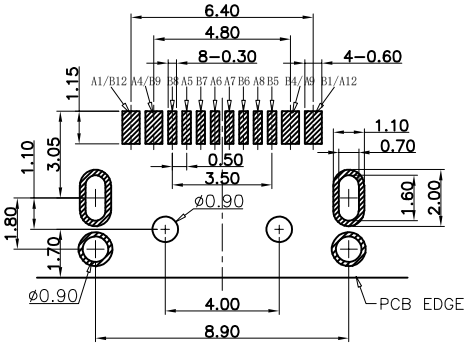

RECOMMEND P.C.B LAYOUT

TOLERANCE UNSPECIFIED ±0.05mm

NOTES:

SPECIFICATION:

1.CURRENT RATING: 3.0 A
2.VOLTAGE RATING: 3.0 V
3.VBUS & GND PINS AND OTHER PINS: 40mΩ/PIN MAX
SHIELD: 50mΩ/MAX
LLCR MAX. CHANGE OF ALL PINS: 10Ωm
4.INSULATION RESISTANCE: 100MΩ MIN
5.DIELECTRIC WITHSTAND VOLTAGE,AC 100V FOR 1MINUTE
6.LNSERTION FORCE: 0.5~2.0kgf
7.UNMATING FORCE: 0.8-2.0kgf
8.DURABILITY: 10000 CYCLES
9.OPERATING TEMPERATURE: -35°C~+85°C
10.THE PEAK TEMPERATURE ON THE BOARO SHALL BE MAINTAINED FOR 10 SECONDS AT 210-230°C
11.WATERPROOF:IP-X7.

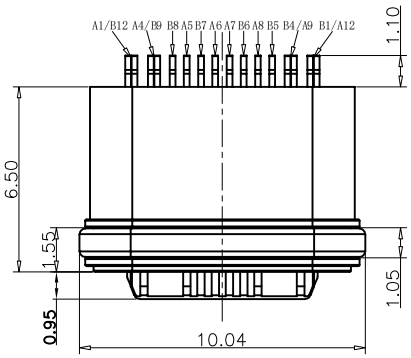

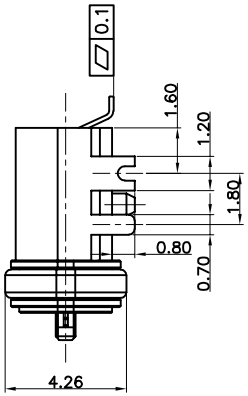

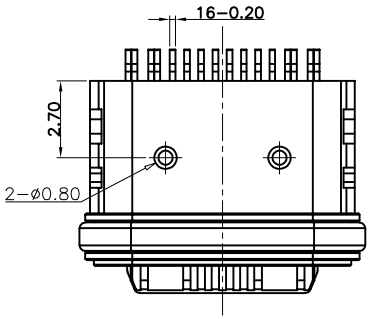

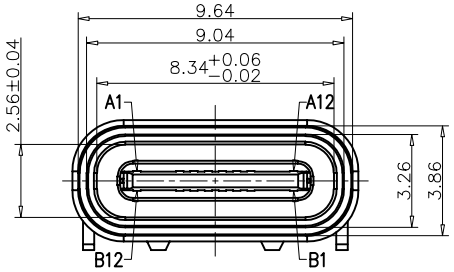

USB TYPE C PIN ASSIGNMENTS

PIN NUMBER	SIGNAL NAME	PIN NUMBER	SIGNAL NAME
A1	GND	B12	GND
A4	VBUS	B9	VBUS
A5	CC1	B8	SBU2
A6	DP1	B7	DN2
A7	DN1	B6	DP2
A8	SBU1	B5	CC2
A9	VBUS	B4	VBUS
A12	GND	B1	GND

TABLE:

NO	PART	Q'TY	Material
1	SHELL	1	ZINC ALLOG,NI30u"Min PLATED
2	CONTACT	16	C7025,TIN80u"/Au3u"/NI30u"PLATED
3	MID PLATE	1	SUS301,NO PLATING
4	HOUSING	1	LCP(E130i) UL94 V-0 BLACK
5	WATERPROOF RING	1	SILICONE(SI/60-65A) UL94 V-0 BLACK

TOLERANCE			
X.X	±0.30	X.°	±10°
.XX	±0.20	.X°	± 8°
.XXX	±0.10	.XX°	± 5°
UNITS	mm		
MATERILA	----		
FINISH	-----		

NAME(INTENDED USE)
CUSTOMER DRAWING

PART NO.
FY23-010TC161F165-01

DESIGN: ZXM

CHED:

APPD:

FUYOU 富盈实业 广东富盈兴业精密科技实业有限公司
Guangdong FUYOU Precision Electronic Technology Co.,LTD.

TITLE:
TYPE C 16P防水母座板上压缩款

DRAWG NO.
FY23-010TC161F165-01

SCALE	SHEET	REV.
1:1	1/2	A