CUSTOMER

REV.	ECN NO.	DESCRIPTION	DATE	DESIGN

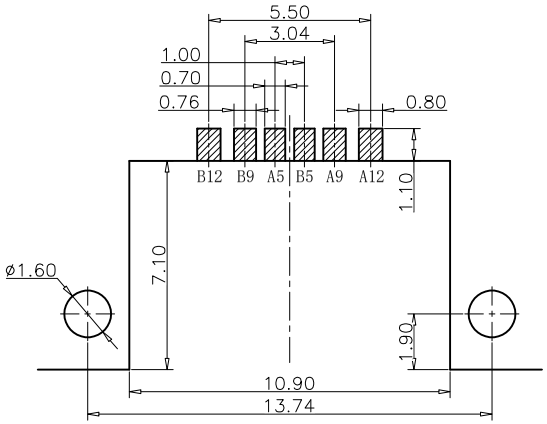

RECOMMEND P.C.B LAYOUT(COMPONENT SIDE)

TOLERANCE FOR PCB LAYOUT IS ±0.05

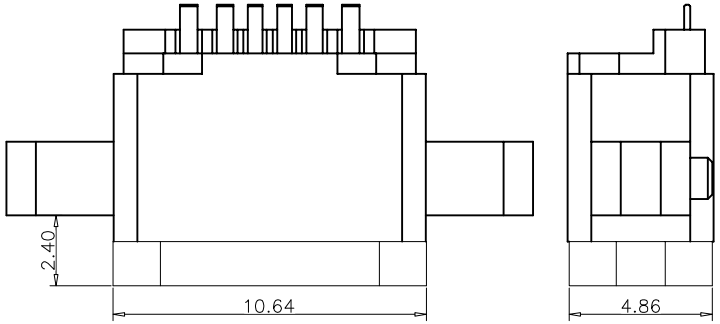

带防水圈示意图

NOTES:

SPECIFICATION:

1.CURRENT RATING: 3.0A MAX
2.VOLTAGE: 100 VAC
3.TEMPERATURE RANGE: -30°C~+85°C
4.CONTACT RESISTANCE: 40 MILLIONHM MAX
5.INSULATION RESISTANCE: 100 MEGOHMS MIN
6.LNSERTION FORCE: 5N~20N
7.UNMATING FORCE: 8N-20N
8.DURABILITY: 10000 CYCLES
9.WATER PROOFNESS:THISPRODUCTIS BASED ON IPX7.

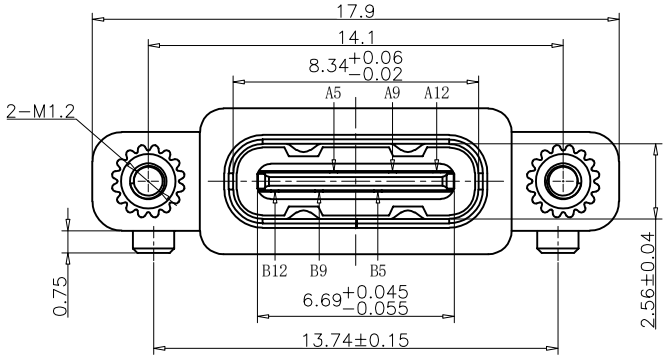

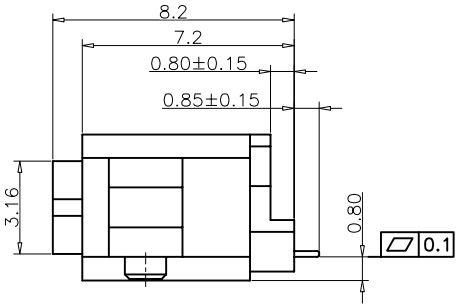

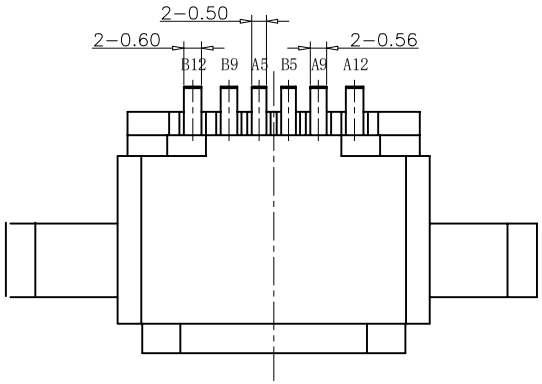

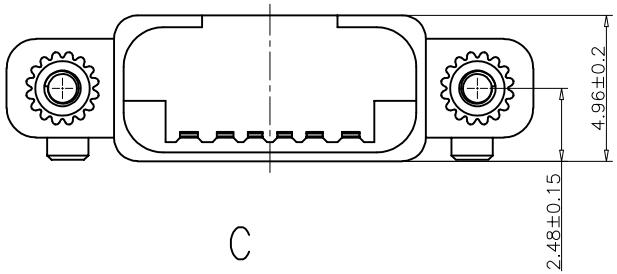

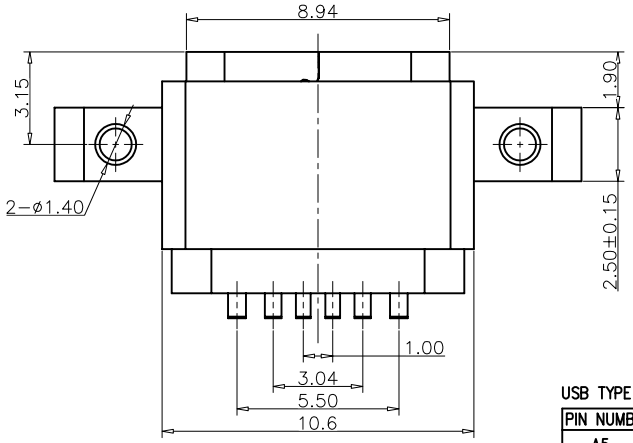

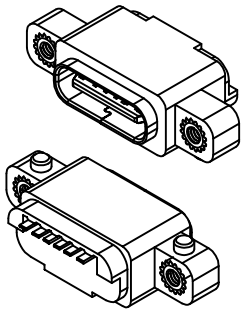

TABLE:

NO	PART	Q'TY	Material
1	SHELL	1	STAINLESS STEEL,NI PLATED
2	CONTACT	6	COPPER STEEL,TIN/Au/NI PLATED
3	MID PLATE	1	STAINLESS STEEL,NO PLATED
4	1MD HOUSING	1	HIGH TEMPERATURE PLASTIC BLACK
5	2MD HOUSING	1	HIGH TEMPERATURE PLASTIC BLACK

USB TYPE C PIN ASSIGNMENTS

PIN NUMBER	SIGNAL NAME	PIN NUMBER	SIGNAL NAME
A5	CC1	B12	GND
A9	VBUS	B9	VBUS
A12	GND	B5	CC2

TOLERANCE		NAME(INTENDED USE) CUSTOMER DRAWING	FUYOU 广东富盈兴业精密科技实业有限公司 Guangdong FUYOU Precision Electronic Technology Co.,LTD.
X.X ±0.30	X.° ±10°	PART NO. FY23- 11TC61F282-08	TITLE: CF6P防水母座带螺IP67
.XX ±0.20	.X° ± 8°		
.XXX ±0.10	.XX° ± 5°	DESIGN: ZXM	DRAWG NO.
UNITS	mm		
MATERILA	----	CHED:	SCALE 1:1 / SHEET 1/2 / REV. A
FINISH	-----	APPD:	