由 Autodesk 教育版产品制作

RoHS Compliant

REV.	MODIFICATION	ECN No.	NAME	DATE
A0	NEW		LEN.SONG	2022.01.05

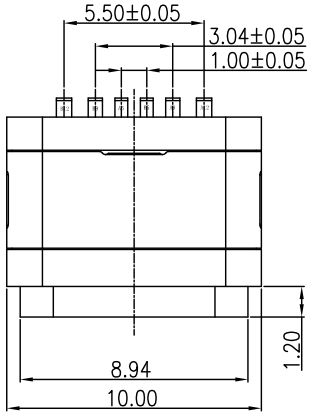

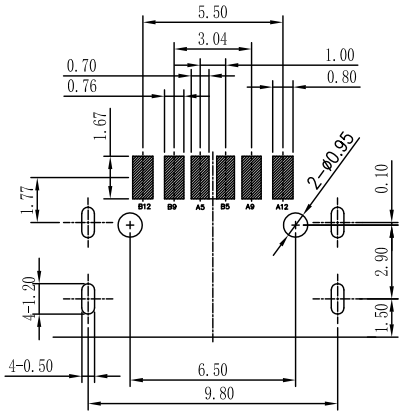

RECOMMENDED P.C.B. LAYOUT
TOLERANCE UNSPECIFIED ±0.05mm

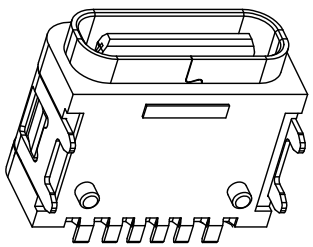

NOTES:
1. CURRENT RATING:
   3.0A MAX.
2. DIELECTRIC WITHSTAND VOLTAGE:
   100VAC.
3. TEMPERATURE RANGE:
   -30 °C ~ 85 °C.
4. CONTACT RESISTANCE:
   40 MILLIONHM MAX.
5. INSULATION RESISTANCE:
   100 MEGOHMS MIN.
6. INSERTION FORCE :
   5N~20N.
7. UNMATING FORCE:
   8N~20N.
8. DURABILITY:
   10,000 CYCLES.
9. WATERPROOF RATING: IPX6.
10. ALL PRODUCTS COMPLY WITH ROHS
    ENVIRONMENTAL PROTECTION REQUIREMENTS.

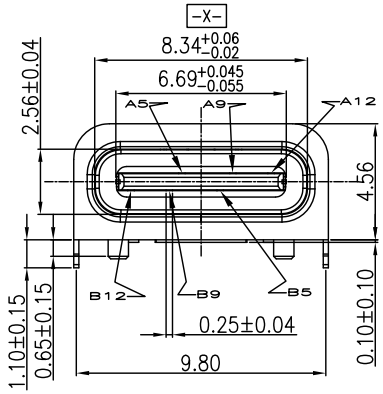

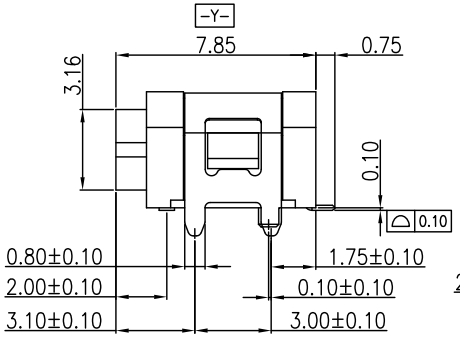

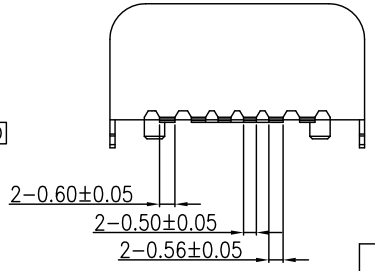

A5	CC1	B12	GND
A9	VBUS	B9	VBUS
A12	GND	B5	CC2
PIN	SIGNAL NAME	PIN	SIGNAL NAME

TABLE:

P/N			PART NAME	P/N	MATERIALS	FINISH
A180203111007			外壳	S1846A504	SUS304R-1/2H.T=0.20mm	Ni:50u"Min;
	A180203111005		MD外模	SY22034002	PA9T(G.F30%).BLACK.	
	A180203111006		内壳	S1846A003	SUS304R-1/2H.T=0.30mm	Ni:50u"Min;
		MD半成品 B180203111003	端子	T18118005	C2680R-H.T=0.20mm	Ni:30u"Min; Au:CONTACT AREA:1u", Solder AREA:G/F
			塑胶	SY11034001	LCP(G.F30%) BLACK.	/

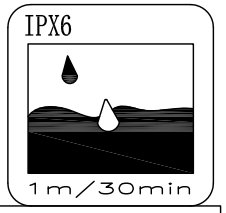

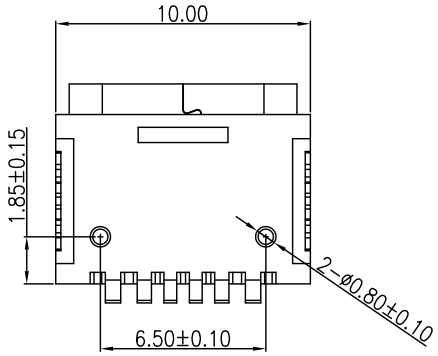

防水圈:

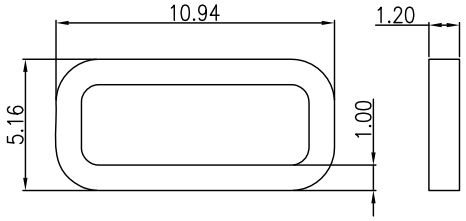

广东富盈兴业精密科技实业有限公司

.X: ±0.35	.X°: ±5.0°	INTENDED USE: CUSTOMER DRAWING	TITLE: TYPE C 6Pin SMT 防水(MD款) 四插板脚
.XX: ±0.25	.XX°: ±3.0°	APPD. FY23-59TC61F1785-02	PART NO.: SEE TABLE 1
.XXX: ±0.15	.XXX°: ±1.5°	CHKD.:	DWG. NO.:
MAT'L.: SEE NOTES		DR.: Len.Song	SCALE: 1:1 / PAGE: 1/1
FINISH:			UNIT: mm / REV.: A0

由 Autodesk 教育版产品制作