SAMZO REAC/ROHS

REV	ECN NO	DESRIPTION	DESIGN	APPROVAL	DATE
A1	NEW	Replace frame			2018.06.12

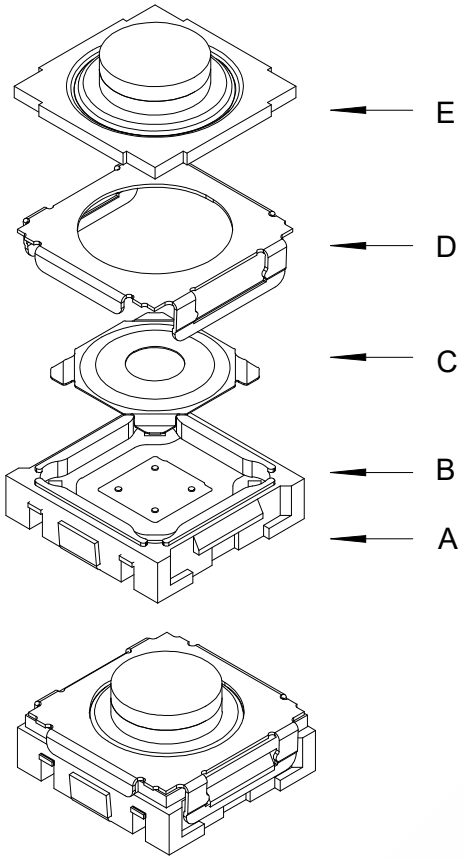

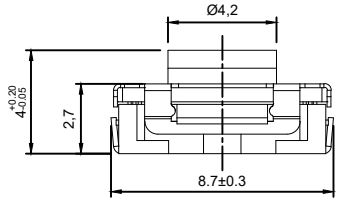

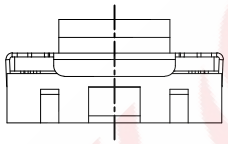

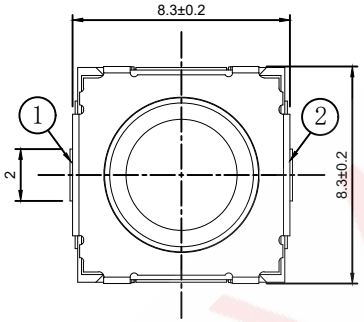

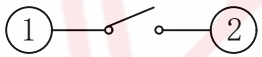

电路图

CIRCUIT DIAGRAM

主要技术参数、性能

The Main Thchnology Performance

额定电流、电压 Rate voltage.current	DC16V 50mA
接触电阻 Contact resistance	≤100mΩ
按力 Operating force	±50gf
行程 Travel	0.9±0.3mm
绝缘电阻 Insulated resistance	≥100MΩ
介电强度 Dielectric strength	≥250VAC/1min

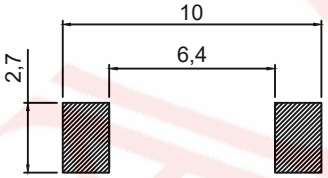

PCB. 焊接图

PCB. WELDING DRAWING

E	按钮	硅胶	1	/
D	盖板	不锈钢	1	清洗
C	弹片	不锈钢	1	镀银
B	本体	LCP	1	黑色
A	卡件	黄铜	1	镀银
项目 ITEM	名称 DESCRIPTION	材质 MATERIAL	数量 QTY	表面处理/颜色 FINSH/COLOR

LD 4 D 40 1 * 1 *

Ⓐ Ⓑ Ⓒ Ⓓ Ⓔ Ⓕ Ⓖ Ⓗ

A. 系列:LD-8.3*8.3mm
B. 贴装方式:4-立式贴片
C. 引脚规格:D-2PIN
D. 操作高度:40-4.0mm
E:操作力度:1-400gf
F:操作寿命:1-10万/2-30万次
G:固定方式:1-无住
H:物料编码:L-绿柄/H-灰白柄/F-黄绿柄

DESIGN	WANGGUIFA	2018.06.12
CHECKED	ZHENGUILAN	2018.06.12
APPROVED	LILIANJIANG	2018.06.14

GENERAL TOLERANCE	
≥0~2<	±0.15
≥2~5<	±0.25
≥0~2<	±0.15
≥5	±0.35

FIRST VIEW

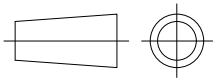

SCALE	1:1	UNIT	mm

The copyright belongs to samzo parts [China] Co., Ltd. please use the material after samzo parts agree to authorize. The final right of interpretation belongs to samzo parts.
WWW.KKK-JP.COM

SAMZO COMPONENTS

Electronic switch and connector manufacturer

TITLE:: **8.3*8.3*4.0** 汽车贴片开关

DWG NO: LD4D40-P9441

PART NO: LD4D4016012

MODEL NO: LD4D401-*-1-*

NAME: TACT SWITCH