SAMZO | REAC/ROHS

REV	ECN NO	DESRIPTION	DESIGN	APPROVAL	DATE
A1	NEW	Replace frame			2018.06.12

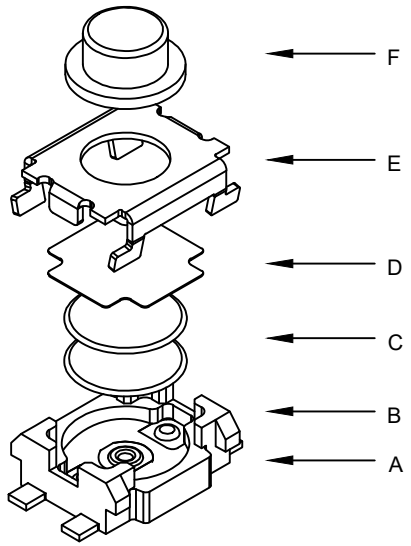

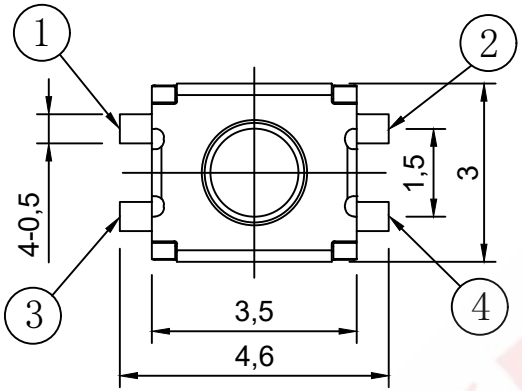

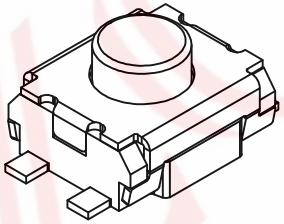

主要技术参数、性能

The Main Thchnology Performance

额定电流、电压 Rate voltage.current	50mA DC12V
接触电阻 Contact resistance	≤100mΩ
按力 Operating force	±50gf
行程 Travel	0.20±0.10mm
绝缘电阻 Insulated resistance	≥100MΩ
介电强度 Dielectric strength	≥250VAC/1min

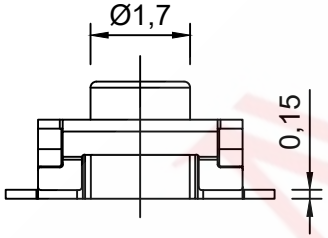

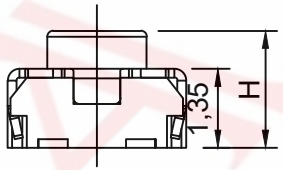

C 4 B *** * * 1 0

A B C D E F G H

A. 系列:C-微型侧按
B. 贴装方式:4-立式贴片
C. 引脚规格:B-4PIN
D. 操作高度:180-1.8/200-2.0/250-2.50mm
E:操作力度:1-180/2-260gf
F:操作寿命:1-30K/2-100K/3-200K次
G:固定方式:1-无柱
H:物料编码:0-常规

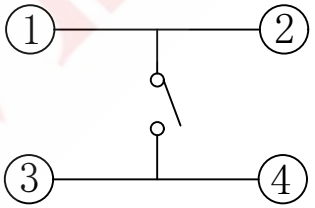

电路图

CIRCUIT DIAGRAM

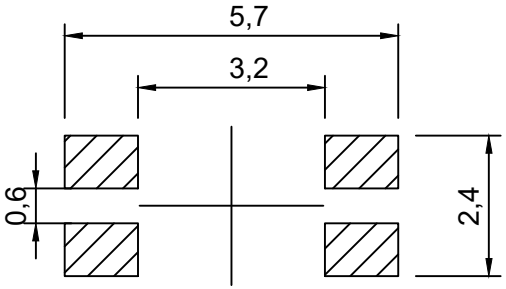

PCB. 焊接图

PCB. WELDING DRAWING

项目 ITEM	名称 DESCRIPTION	材质 MATERIAL	数量 QTY	表面处理/颜色 FINSH/COLOR
F	按钮	LCP	1	黑色
E	盖板	不锈钢	1	镀银
D	防尘胶	聚酰亚胺	1	橙黄色
C	弹片	不锈钢	2	镀银
B	本体	LCP	1	黑色
A	卡件	磷铜	1	镀银

DESIGN	WANGGUIFA	2018.06.12
CHECKED	ZHENGUILAN	2018.06.12
APPROVED	LILIANJIANG	2018.06.14

GENERAL TOLERANCE	
≥0~2<	±0.15
≥2~5<	±0.25
≥0~2<	±0.15
≥5	±0.35

FIRST VIEW

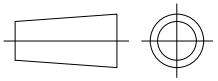

SCALE 1:1 UNIT mm

SAMZO COMPONENTS

Electronic switch and connector manufacturer

The copyright belongs to samzo parts [China] Co., Ltd. please use the material after samzo parts agree to authorize. The final right of interpretation belongs to samzo parts.
WWW.KKK-JP.COM

TITLE:: 3.0*3.5*H立贴四脚中龟 无柱

DWG NO: C4BXXX-P0120

PART NO: C4B16010713

MODEL NO: C4B-***-*-*-10

NAME: TACT SWITCH