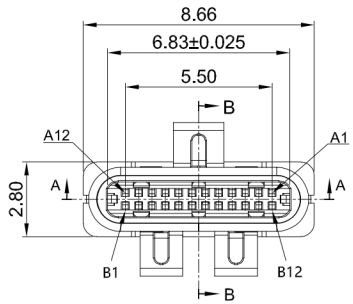

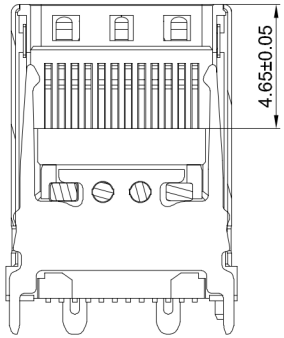

SECTION:A-A

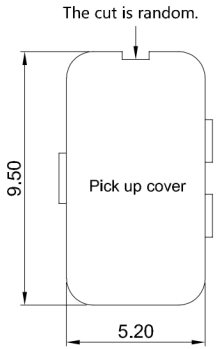

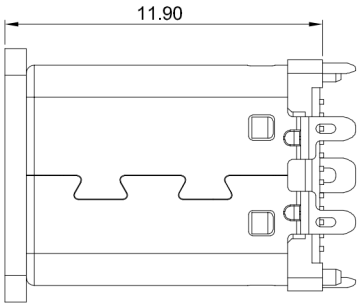

AFTER WITH PICKUP COVER

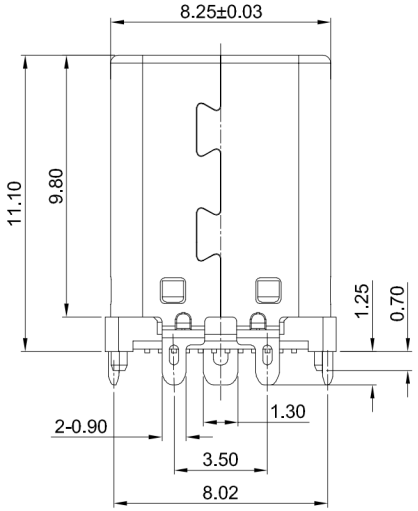

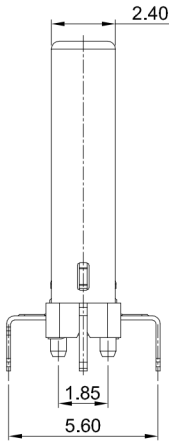

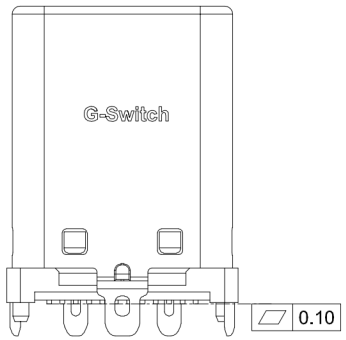

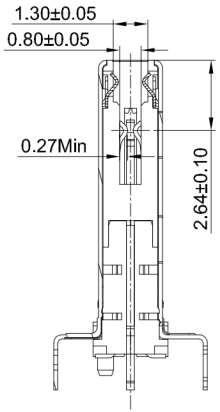

SECTION:B-B

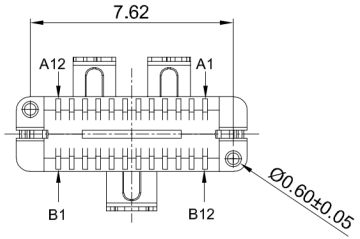

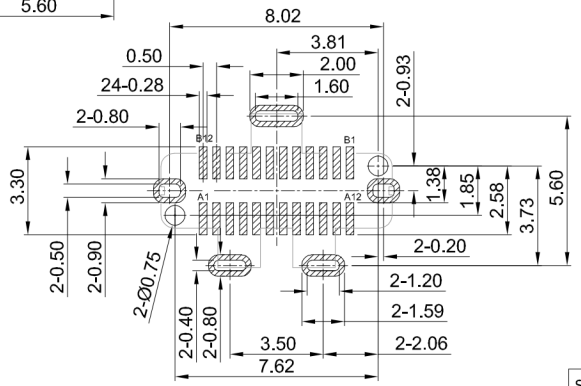

RECOMMENDED PCB LAYOUT
TOLERANCE:±0.05

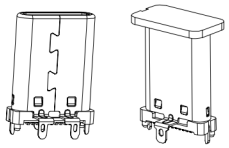

G-Switch USB-C Specification:

1.Current rated: 5A on vbus/1.25A
on vconn/0.25A on other
Voltage rating: 24V AC
2.Withstanding voltage: 100V AC/minute
3.Contact resistance: 40mΩ Max
4.Insulation resistance: 100MΩ Min
5.Operating temperature: -40°C ~ +85°C
6.Mating force: 5N~20N
7.Unmating force: 8N~20N
8.Durability cycle:10,000 cycles
9.Data transmission rate up to 5Gbp/s
10.Compliant with: IEC62680-1-3

USB IF TID:11922

A12	A11	A10	A9	A8	A7	A6	A5	A4	A3	A2	A1
GND	RX2+	RX2-	VBUS	SBU1	D-	D+	CC1	VBUS	TX1-	TX1+	GND
First	Second	Second	First	Second	Second	Second	Second	First	Second	Second	First

B1	B2	B3	B4	B5	B6	B7	B8	B9	B10	B11	B12
GND	TX2+	TX2-	VBUS	VCONN	D+	D-	SBU2	VBUS	RX1-	RX1+	GND
First	Second	Second	First	Second	Second	Second	Second	First	Second	Second	First

NO.	NAME	DESCRIPTION	REMARKS
5	EMC SPRING	STAINLESS STEEL304	CLEAR ONLY
4	TERMINALS	COPPER ALLOY C7025	Au1u Min PLATING ON CONTACT AREA Sn30u Min PLATING ON CONTACT AREA
3	LATCH	STAINLESS STEEL301	Ni PLATING
2	HOUSING	HIGH TEMPERATURE PLASTIC	LCP BLACK UL 94 V-0
1	SHELL	STAINLESS STEEL304	Ni30u"MIN PLATED

Pb Process Capable

RoHS Compliant EU RoHS Standards

HALOGEN Compliant Halogen Free

SCALE: 4:1	UNIT: mm	Title: Vertical Type-c 24P Plug SMT H=11.1mm	
SIZE: A4		Molde Code: GT-USB-9818B	

Unless otherwise General Tolerance:

X.x	±0.30
X.xx	±0.20
X.xxx	±0.10
X.x°	±3°
X.xx°	±2°

DRAWN	CHECKED	APPROVED	DATE
Xia	Chen	Chen	2023.02.01

品赞科技 G-Switch ®
www.dg-switch.com

REV: A0 SHEET: 1/1

品赞电子（东莞）有限公司