REV.	ECN NO OR DESCRIPTION	REVISED	DATE

Pb Process Capable

RoHS Compliant 2011/65/EU

HALOGEN Compliant Halogen Free

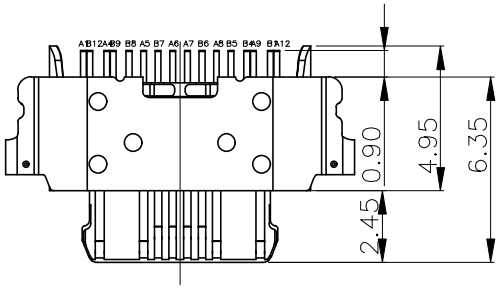

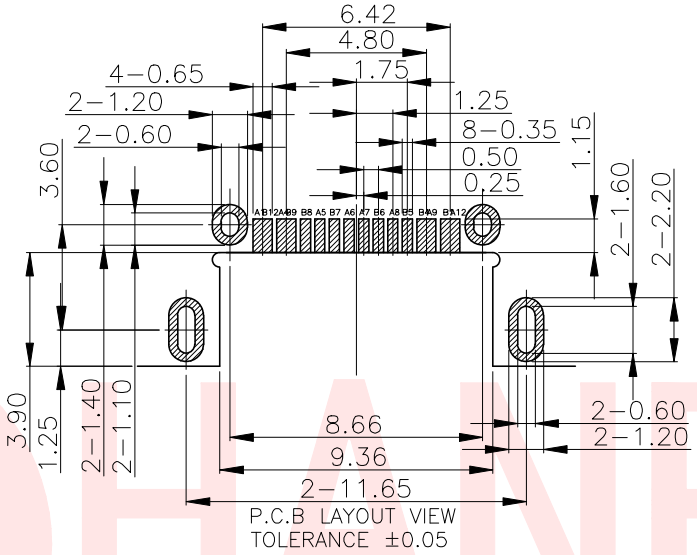

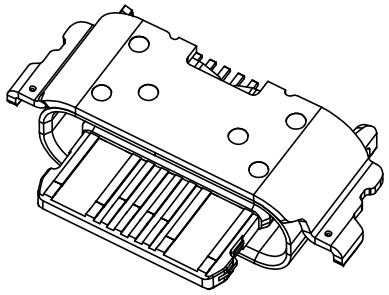

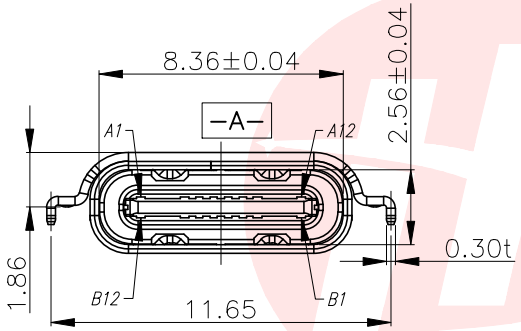

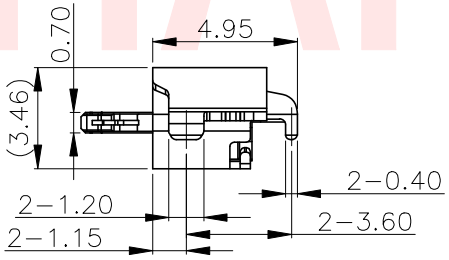

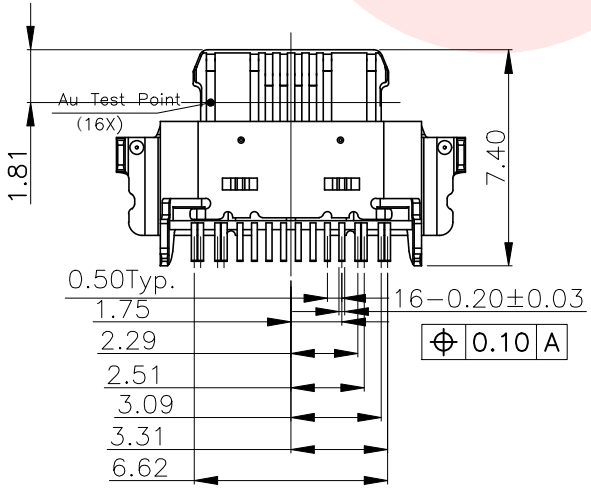

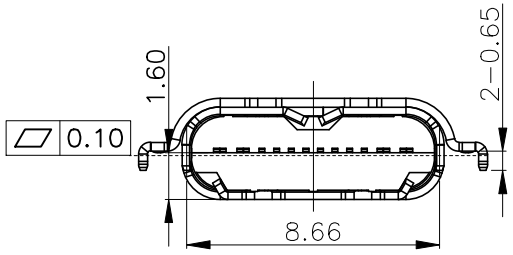

SPECIFICATION:

1.ELECTRICAL CHARACTERISTICS:
- 1.1 CURRENT RATING: 5A
- 1.2 TEMPERATURE RANGE: −40 °C ~ 85 °C
- 1.3 CONTACT RESISTANCE: 30 MILLIONHM MAX.
- 1.4 DIELECTRIC WITHSTANDING VOLTAGE: 100 VAC r.m.s
- 1.5 INSULATION RESISTNACE: 100 MEGOHMS MIN.

2.MECHANICAL CHARACTERISTICS
- 2.1 INSERTION FORCE: 5~20N
- 2.2 EXTRACTION FORCE: Initial:8~20N,ATER TEST 6~20N
- 2.3 DURABILITY:10,000CYCLES

3.THE SHELL LENTH IS LESS THAN THE MINIMUM SPECIFIIED BY THE USB TYPE C STANDARD.AS SUCH IS CONNOT INDENOENDENTLY BE GUARANTEED TO MEET ALL TYPE C MECHANICAL REQUIREMENTS.

PIN ASSIGNMENT													
A1	A2	A3	A4	A5	A6	A7	A8	A9	A10	A11	A12	BLADE	SHELL
GND	TX1+	TX1−	VBUS	CC1	D+	D−	SBU1	VBUS	RX2−	RX2+	GND	GND	GND
GND	RX1+	RX1−	VBUS	SBU2	D−	D+	CC2	VBUS	TX2−	TX2+	GND		
B12	B11	B10	B9	B8	B7	B6	B5	B4	B3	B2	B1		

NO.	DESCRIPTION	QTY.	MATERIAL	FINISHED
4	MID PLATE	1 PCS	STAINLESS STEEL	None
3	CONTACT	1 SET	COPPER ALLOY	Au & Ni Plated
2	MOLDING HOUSING	1 PCS	PLASTIC	None
1	SHELL	1 PCS	STAINLESS STEEL	Ni Plated

UNLESS OTHERWISE SPECIFED TOLERANCES

DECIMALS: X :±0.25, X.X :±0.20, X.XX :±0.15

ANGLES: X :±2°, X.X :±1°

东莞市汉博电子科技有限公司
DONGGUAN HANBO TECHNOLOGY CO. , LTD

TITLE	TYPE C 16PIN沉板1.60壳长4.95漏舌片			
DWN	xiong	PART NO. MC−129−C16L495		
CHKD	lee	SCALE:1:1	UNIT: mm	
APVD	wang	SIZE: A4	SHEET:1OF 1	REV: A4

CUSTOMER COPY