CUSTOMER

REV.	ECN NO.	DESCRIPTION	DATE	DESIGN

NOTE:
1.Contact Resistance:40mOHM Max.;
2.Dielectric Withstanding Voltage:100V AC For 1 Minute;
3.Insulation Resistance:100M OHM Min.;
4.Mating And Unmating Force:
Mating Force: 5~20N
Unmating Force: 8~20N;
6~20N AFTER TEST;
5.Durability:10000 Cycles;

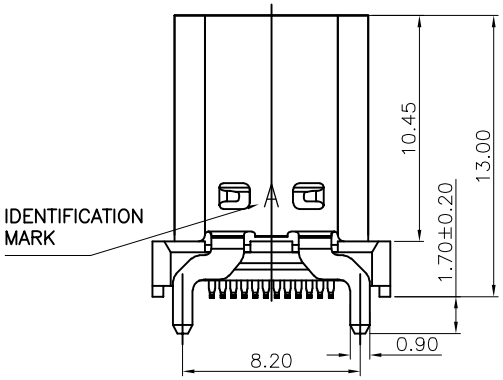

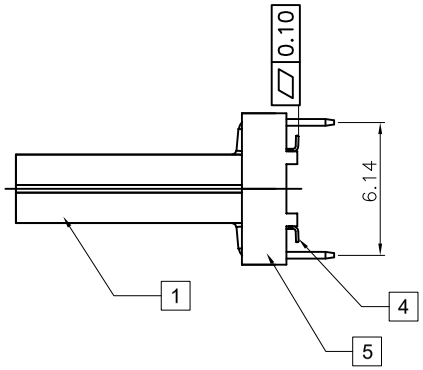

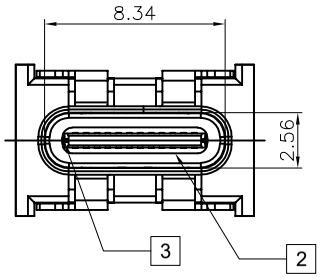

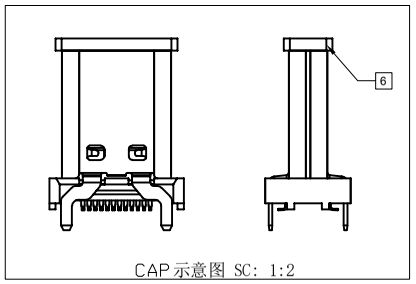

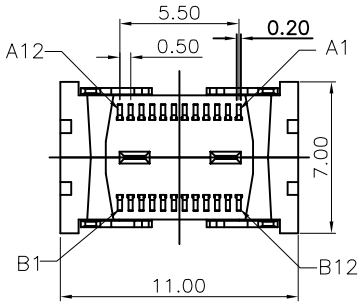

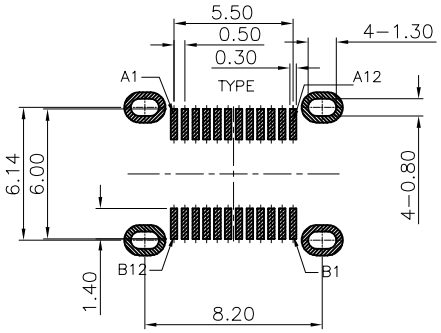

RECOMMEND P.C.B LAYOUT(COMPONENT SIDE)

TOLERANCE FOR PCB LAYOUT IS ± 0.05

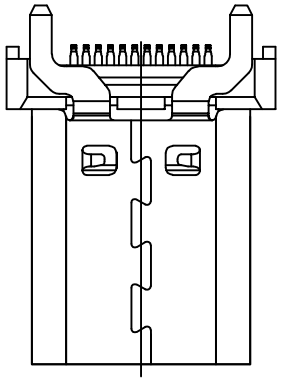

USB TYPE-C PIN ASSIGNMENTS

PIN NUMBER	SIGNAL NAME	PIN NUMBER	SIGNAL NAME
A1	GND	B12	GND
A2	SSTXp1	B11	SSRXp1
A3	SSTXn1	B10	SSRXn1
A4	VBUS	B9	VBUS
A5	CC1	B8	SBU2
A6	Dp1	B7	Dn2
A7	Dn1	B6	Dp2
A8	SBU1	B5	CC2
A9	VBUS	B4	VBUS
A10	SSRXn2	B3	SSTXn2
A11	SSRXp2	B2	SSTXp2
A12	GND	B1	GND

Item	Title	Material	Dispose	Q'TY
1	Shell	SUS304	Ni:30u" Min.	1PCS
2	GND Plate	SUS301		2PCS
3	Mid Plate	SUS301		1PCS
4	Contact	C7025	Mating Area: Gold Solder Tails: Matt Tin	2PCS
5	InsertMolding	LCP E6808	UL 94V-0 Black	1PCS
6	COVER	LCP E6808	UL 94V-0 Black	1PCS

TOLERANCE			
X.X	±0.30	X.°	±10°
.XX	±0.20	.X°	± 8°
.XXX	±0.10	.XX°	± 5°
UNITS		mm	
MATERILA		----	
FINISH		-----	

NAME(INTENDED USE) CUSTOMER DRAWING

PART NO. FY23-31TC24F413-01

DESIGN: ZXM

CHED:

APPD:

FUYOU 广东富盈兴业精密科技实业有限公司 Guangdong FUYOU Precision Electronic Technology Co.,LTD.

TITLE: CF 24P立贴13.0

DRAWG NO. FY23-31TC24F413-01

SCALE	SHEET	REV.
1:1	1/2	A