CUSTOMER DRAWING

RoHS

HF

SPECIFICATIONS:

1. ELECTRICAL CHARACTERISTICS:
   1-1. CONTACT RESISTANCE: 30mΩ MAX.(INITIAL)
   AFTER LIFE TEST 50mΩ.
   1-2. DIELECTRIC WITHSTANDING VOLTAGE: 500V AC FOR ONE MINUTE.
   1-3. INSULATION RESISTANCE: 1000MΩ MIN. MEASURED BY 500 VDC.
2. MECHANICAL CHARACTERISTICS:
   2-1. INSERTION FORCE : 3.5Kgf Max.
   2-2. WITHDRAWAL FORCE : 1.0Kgf Min. INITIAL ,0.8Kgf Min. AFTER TEST.
   2-3. TERMINAL RETENTION FORCE: 0.5KGF/PIN MIN.
3. LIFE TEST: 5,000 CYCLES.
4. ⓧ MARK IS FAI DIM. ▲ MARK IS MAJOR DIM. ▲G MARK IS CPK DIM.
5. PART NO: WUSF11804-0A00
   PLATING: GOLD 1u"
   PACKING: REEL
   RoHS + HF

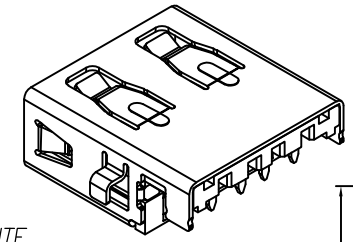

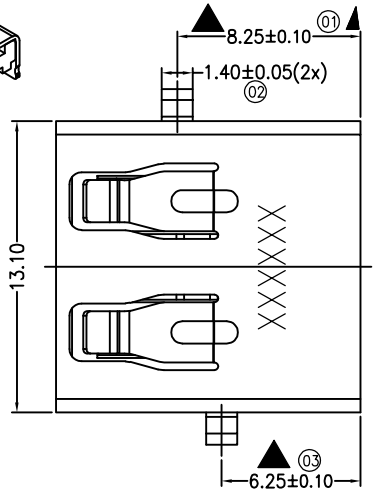

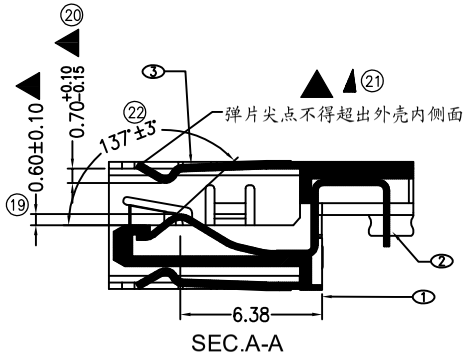

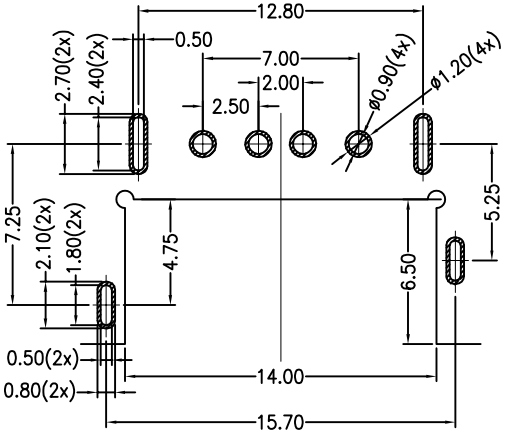

RECOMMEND P.C.B LAYOUT(COMPONENT SIDE)

TOLERANCE FOR PCB LAYOUT IS ± 0.05

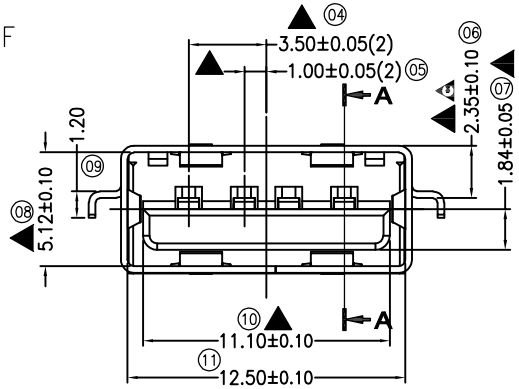

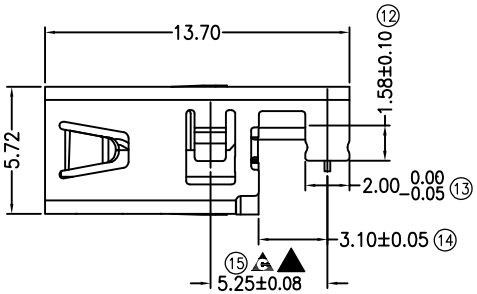

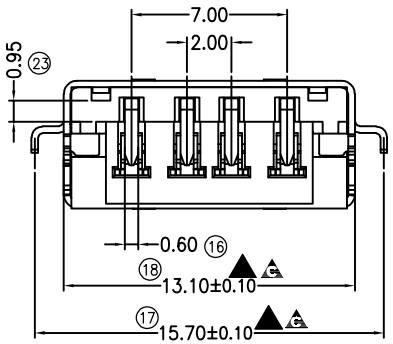

序号	零件	数量	料号	材质规格	电镀&颜色
3	外壳	1	040-002A-0130	SUS430 T=0.3mm	ALL OVER NIi 50-100u"
2	端子	4	020-100A-0012	C5191R-EH,T=0.25mm	G/F ON CONTACT ARER Sn 100 u"ON SOLDER AREA ALL OVER Ni 50 u"Min
1	本体	1	001-0004-0113	LCP E130i UL94 V-0	BLACK

REV.	REVISION RECORD	DATE
A	DRAFT VERSION	2019.06.18

UNIT: MM

SIZE: A4

GENERAL TOLERANCES	
LINEAR	ANGLES
0.0 ±0.30	X°REF± 6°
0.00 ±0.20	X° ± 3°
0.000±0.10	X°X' ± 2°

SCALE: 1:1	NAME	DATE
APPROVED		
DESIGNER		
DRAWN		

广东富盈兴业精密科技实业有限公司

TITLE: USB2.0 RECEPTACLE H2.35 A TYPE L=13.7mm

PART.NO: WUSF11804-0A00

DWG.NO: WUSF11804-0A00

REV: A

SHEET: 1/1