Pb Process Capable

RoHS Compliant 2011/65/EU

Compliant Halogen Free

REV.	ECN NO.	DESCRIPTION	DATE	DESIGN

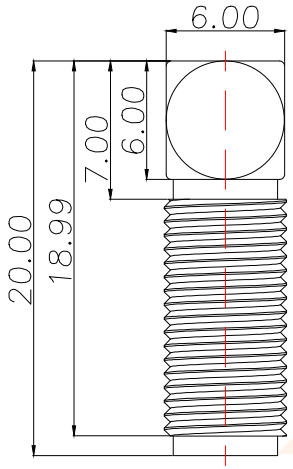

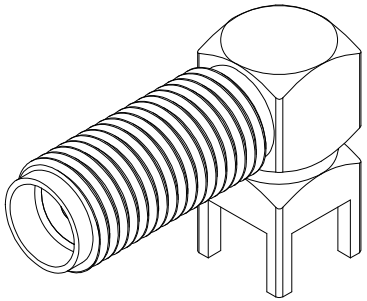

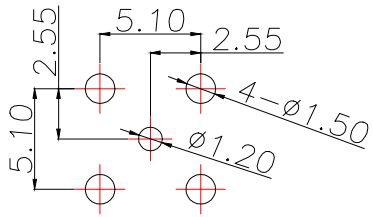

PCB.WELDING DRAWING (TOLERANCE:±0.05)

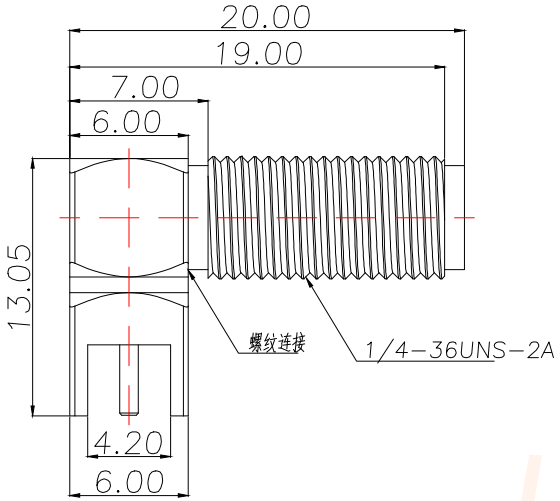

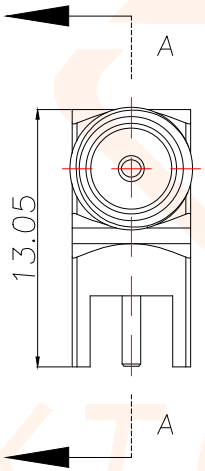

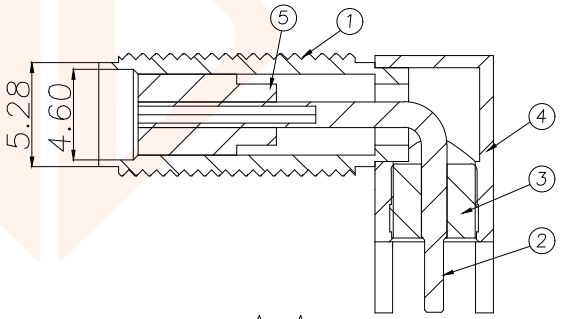

A-A

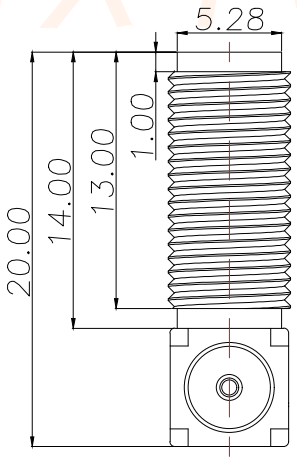

Technical requirements	
Characteristic impedance	50Ω
Frequency range	0-6GHZ
Contact resistance	
Inner conductor	≤3mΩ
Outer conductor	≤2mΩ
Insulated resistance	≥5000MΩ
Salt spray time	48H
Separation force	≥0.28N
Appearance: no shift point burr scratch surface bright, no dirt, no deformation, etc	

序号	名称	数量	材料	备注
1	全螺铜套	1	黄铜	镀金
2	母针	1	黄铜	镀金
3	绝缘体1	1	PTFE	
4	铜座	1	黄铜	镀金
5	绝缘体2	1	PTFE	

TOLERANCE		深圳聚兴泰电子科技有限公司 Shenzhen Juxingtai Electronic Technology Co., Ltd	
X.:±0.30	X.°:±5°	PART NO. ASMA-KWE-L20	TITLE: 弯头一全螺内孔一H13*20-LW
X.X:±0.25	X.X°:±1°		
X.XX:±0.15			
UNITS	mm	DESIGN: Ethan	MANUFACTURE DWG
MATERILA	— — —	CHED: Olvia	SCALE N:A / SHEET 1/1
FINISH	— — —	APPD: Ava	

JXTCONN